MR-J4 Servo Motors and Amplifiers Overview

The MR-J4 provides the highest power, performance, and flexibility in the Mitsubishi Electric lineup and is available from 50W-55KW. Additional features include advanced one-touch auto tuning and advanced vibration suppression control II functions. The MR-J4 motors have the same flange sizes and use the same power encoder and brake cables as the MR-J3 for easy migration from the previous generation of servo amplifiers. The MR-J4 is easily setup and sized with M-Size sizing software and MR-Configurator2 configuration software.

MR-J4 Amplifiers

X = Compatible
- = Not compatible

Type (*6)		Number of Control Axes	Power Supply	Rated Output (kW) (*1, *4)	Interface								Control Mode					Compatible Motor Series											
					SSCNET III / H	CC-Link IE Field	Pulse Train	Analog Voltage	RS-422 Multi-Drop	EtherCAT®	EtherNet/IP™	PROFINET®	Position	Speed	Torque	Positioning Function	Fully Closed Loop Control (*2)	HG-KR	HG-MR	HG-SR	HG-JR	HG-RR	HG-UR	HG-AK	LM-H3 (*5)	LM-F (*5)	LM-K2 (*5)	LM-U2 (*5)	TM-RFM
CC-Link IE Field Interface	MR-J4-GF-RJ	1 axis	3-Phase 200VAC	0.1, 0.2, 0.4, 0.6, 0.75, 1, 2, 3.5, 5, 7, 11, 15, 22	-	X	-	-	-	-	-	-	X	X	X	X	X	X	X	X	X	X	X	-	X	X	X	X	X
			3-Phase 400VAC	0.6, 1, 2, 3.5, 5, 7, 11, 15, 22	-	X	-	-	-	-	-	-	X	X	X	X	X	-	-	X	X	-	-	-	-	X	-	-	-
SSCNET III/H Interface	MR-J4-B(-RJ)	1 axis	1-Phase 100VAC	0.1, 0.2, 0.4	X	-	-	-	-	-	-	-	X	X	X	-	X	X	X	-	-	-	-	-	X	-	X	X	X
			3-Phase 200VAC	0.1, 0.2, 0.4, 0.6, 0.75, 1, 2, 3.5, 5, 7, 11, 15, 22, 30, 37	X	-	-	-	-	-	-	-	X	X	X	-	X	X	X	X	X	X	X	-	X	X	X	X	X
			3-Phase 400VAC	0.6, 1, 2, 3.5, 5, 7, 11, 15, 22, 30, 37, 45, 55	X	-	-	-	-	-	-	-	X	X	X	-	X	-	-	X	X	-	-	-	-	X	-	-	-
	MR-J4W2-B	2 axes	3-Phase 200VAC	0.2, 0.4, 0.75, 1	X	-	-	-	-	-	-	-	X	X	X	-	X	X	X	X	X	-	X	-	X	-	X	X	X
	MR-J4W3-B	3 axes	3-Phase 200VAC	0.2, 0.4	X	-	-	-	-	-	-	-	X	X	X	-	-	X	X	-	-	-	-	-	X	-	X	X	X
	MR-J4W2-0303B6	2 axes	24VDC/ 48VDC	10W, 20W, 30W	X	-	-	-	-	-	-	-	X	X	X	-	-	-	-	-	-	-	-	X	-	-	-	-	-
General Purpose Interface	MR-J4-A(-RJ)	1 axis	1-Phase 100VAC	0.1, 0.2, 0.4	-	-	X	X	X	-	-	-	X	X	X	X (*3)	X	X	X	-	-	-	-	-	X	-	X	X	X
			3-Phase 200VAC	0.1, 0.2, 0.4, 0.6, 0.75, 1, 2, 3.5, 5, 7, 11, 15, 22, 30, 37	-	-	X	X	X	-	-	-	X	X	X	X (*3)	X	X	X	X	X	X	X	-	X	X	X	X	X
			3-Phase 400VAC	0.6, 1, 2, 3.5, 5, 7, 11, 15, 22, 30, 37, 45, 55	-	-	X	X	X	-	-	-	X	X	X	X (*3)	X	-	-	X	X	-	-	-	-	X	-	-	-
	MR-J4-03A6-RJ	1 axis	24VDC/ 48VDC	10W, 20W, 30W	-	-	X	X	-	-	-	-	X	X	X	X	-	-	-	-	-	-	-	X	-	-	-	-	-
Multi-Network Interface	MR-J4-TM	1 axis	3-Phase 200VAC	0.1, 0.2, 0.4, 0.6, 0.75, 1, 2, 3.5, 5, 7, 11, 15, 22	-	-	-	-	-	X	X	X	X	X	X	X	X	X	X	X	X	X	X	-	X	X	X	X	X
			1-Phase 100VAC	0.1, 0.2, 0.4	-	-	-	-	-	X	X	X	X	X	X	X	X	X	X	-	-	-	-	-	-	-	-	-	-
			3-Phase 400VAC	0.6, 1, 2, 3.5, 5, 7, 11, 15, 22	-	-	-	-	-	X	X	X	X	X	X	X	X	X	X	X	X	X	X	-	-	X	-	-	-

Notes:
1. The listed are the rated output of the servo amplifier. For the compatible Servo Motor capacities, refer to MR-J4 Brochure for more details.
2. MR-J4-B/A servo amplifier is compatible with two-wire type serial linear encoder. For four-wire type serial and pulse train interface (A/B/Z-phase differential output type) linear encoders, use MR-J4-B-RJ/A-RJ servo amplifier.
3. Positioning function is available only with MR-J4-A-RJ.
4. 30 kW or lager is drive unit. One unit of converter unit is required for each drive unit.
5. MR-J4-B/A servo amplifier is compatible with two-wire type and four-wire type serial linear encoders. For pulse train interface (A/B/Z-phase differential output type) linear encoder, use MR-J4-B-RJ/A-RJ servo amplifier.
6. Some functions are available only with the servo amplifier with specific versions. Refer to relevant Servo Amplifier Instruction Manual for detail.

MR-J4-B-RJ

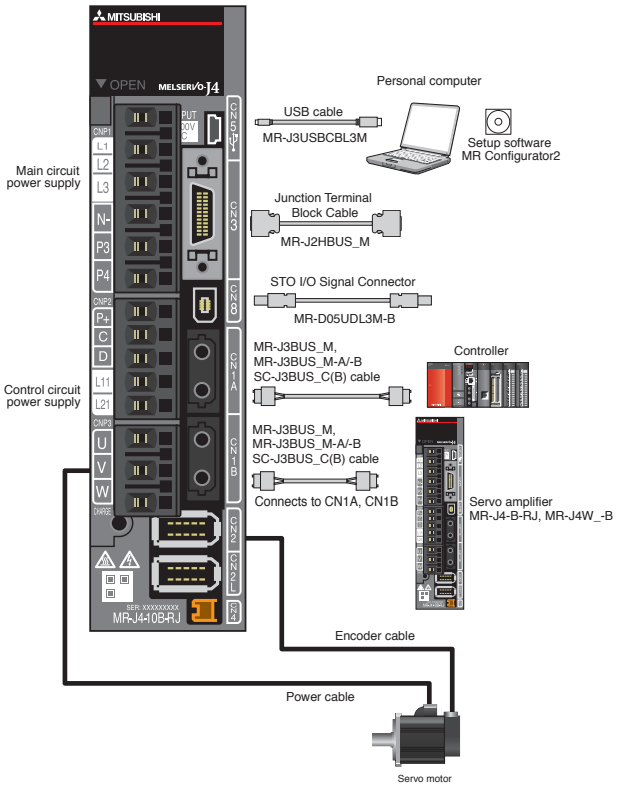

MR-J4-A-RJ

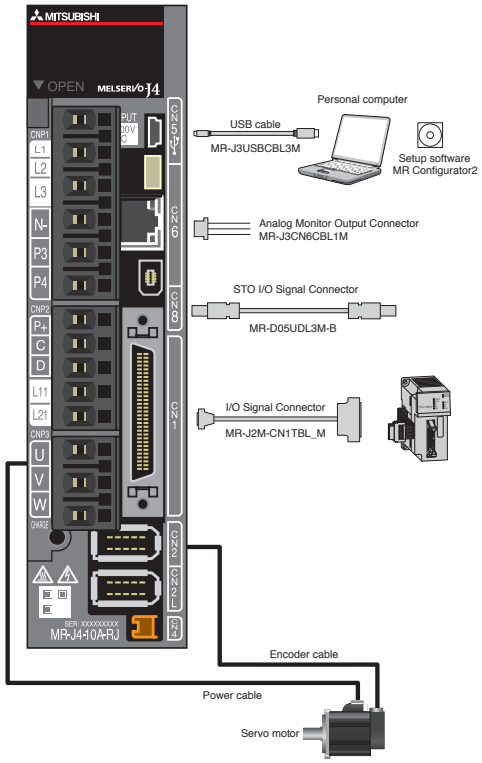

1-Axis Servo Amplifier Selection

(Example Part No. = MR-J4-10B-ED)

MR-J4-□□□-RJ

Mitsubishi General Purpose AC Servo Amplifier

Symbol	Interface
A	General-purpose
B	SSCNET III/H

Symbol	Rated Output [kW]
03	0.03
10	0.1
20	0.2
40	0.4
60	0.6
70	0.75
100	1
200	2
350	3.5
500	5
700	7
11K	11
15K	15
22K	22

Symbol	Special Specifiction
None	-
RJ	Fully closed loop control four-wire type/load-side encoder A/B/Z-phase input compatible Functional safety unit compatible) Positioning mode compatible
ED	Without a dynamic brake (*1)
PX	Without an enclosed regenerative resistor (*4)
RU	MR-J4-_-RJ without a dynamic brake (*1)
RZ	MR-J4-_-RJ without an enclosed regenerative resistor (*4)
EG	DC power input type (*6)

Symbol	Power Supply
None	3-phase 200 VAC or 1-phase 200 VAC (*2)
1	1-phase 100 VAC (*5)
4	3-phase 400 VAC (*3)
6	48VDC/24VDC for 30W or smaller

Notes:

1. Dynamic brake which is built in 7 kW or smaller servo amplifiers is removed. When using the servo amplifier without a dynamic brake, the Servo Motor does not stop immediately at alarm occurrence or power failure. Take measures to ensure safety on the entire system. When the following Servo Motors are used, an electronic dynamic brake may operate at alarm occurrence. HG-KR053, HG-KR13, HG-KR23, HG-KR43, HG-MR053, HG-MR13, HG-MR23, HG-MR43, HG-SR51, and HG-SR52 Disable the electronic dynamic brake by setting the following parameter to "_ _ _ 2." For MR-J4-B/MR-J4-B-RJ/MR-J4-B-RJ010: [Pr. PF06] For MR-J4W_-B: Disable the electronic dynamic brake for all axes with [Pr. PF06] For MR-J4-A/MR-J4-A-RJ: [Pr. PF09] In addition, when [Pr. PA04] is set to "2 _ _ _" (initial value), the Servo Motor may be decelerated to a stop forcibly at alarm occurrence. The forced stop deceleration function will be disabled by setting [Pr. PA04] to "0 _ _ _."
2. Servo amplifiers of 0.75 kW or smaller are available for 1-phase 200 VAC.
3. Servo amplifiers of 0.6 kW, and 1 kW or larger are available for 3-phase 400 VAC.
4. Available in 11 kW to 22 kW servo amplifier. A regenerative resistor (standard accessory) is not enclosed.
5. Servo amplifiers of 0.4 kW or smaller are available.
6. Contact your local sales office for the DC power input type servo amplifier.

MR-J4W2-B

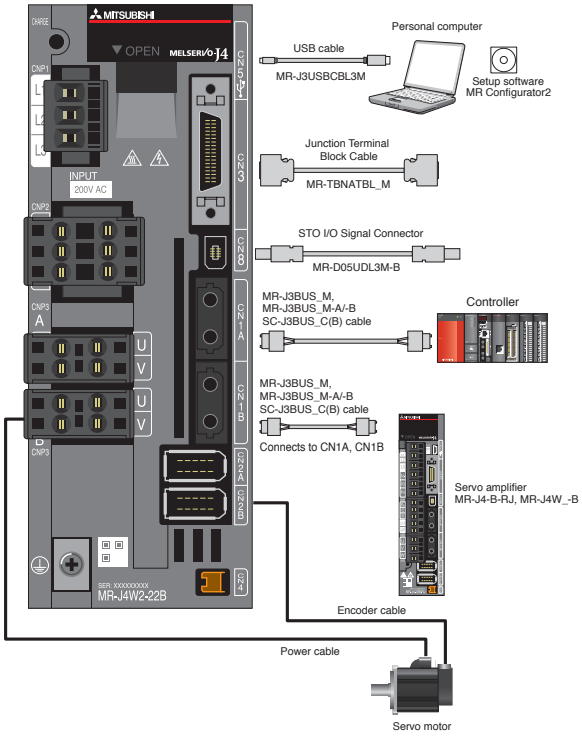

MR-J4W3-B

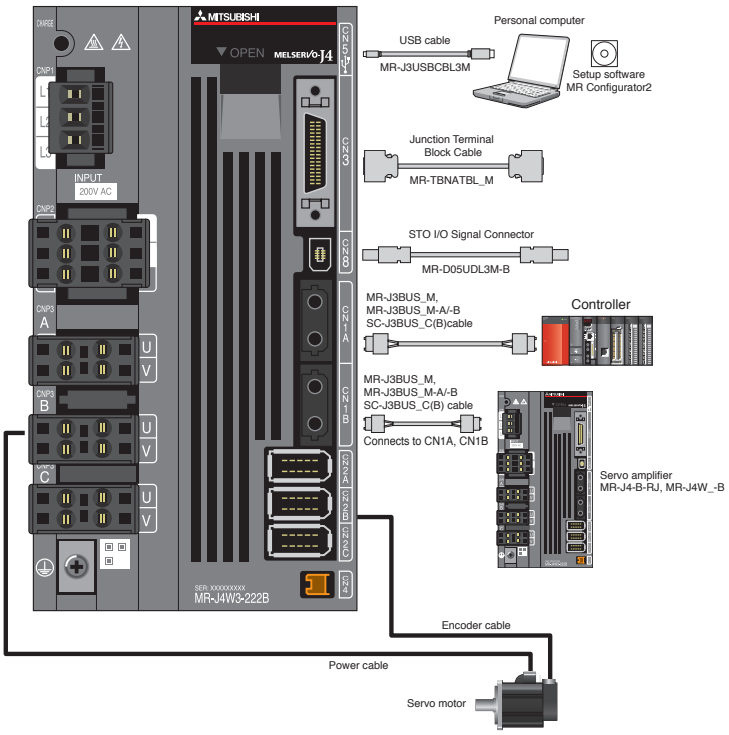

Multi-Axis Servo Amplifier Selection

(Example Part No. = MR-J4W2-22B-ED)

MR-J4W□-□B□-ED

Mitsubishi General Purpose AC Servo Amplifier

Symbol	Special Specification
None	–
ED	Without a dynamic brake (*1)
EG	DC power input type (*3)

Symbol	Main Circuit Power Supply
None	3-phase 200VAC or 1-phase 200 VAC for 0.75 or smaller
6	48VDC/24VDC for 30W or smaller

Symbol	Interface
B	SSCNET III/H

Symbol	Rated Output [kW] (*2)		
	A-Axis	B-Axis	C-Axis
0303	0.03	0.03	-
22	0.2	0.2	-
44	0.4	0.4	-
77	0.75	0.75	-
1010	1	1	-
222	0.2	0.2	0.2
444	0.4	0.4	0.4

Symbol	Number of Axes
W2	2 axes
W3	3 axes

Notes:

1. Dynamic brake which is built in 7 kW or smaller servo amplifiers is removed. When using the servo amplifier without a dynamic brake, the Servo Motor does not stop immediately at alarm occurrence or power failure. Take measures to ensure safety on the entire system. When the following Servo Motors are used, an electronic dynamic brake may operate at alarm occurrence. HG-KR053, HG-KR13, HG-KR23, HG-KR43, HG-MR053, HG-MR13, HG-MR23, HG-MR43, HG-SR51, and HG-SR52 Disable the electronic dynamic brake by setting the following parameter to "_ _ _ 2." For MR-J4-B/MR-J4-B-RJ/MR-J4-B-RJ010: [Pr. PF06] For MR-J4W_-B: Disable the electronic dynamic brake for all axes with [Pr. PF06] For MR-J4-A/MR-J4-A-RJ: [Pr. PF09] In addition, when [Pr. PA04] is set to "2 _ _ _" (initial value), the Servo Motor may be decelerated to a stop forcibly at alarm occurrence. The forced stop deceleration function will be disabled by setting [Pr. PA04] to "0 _ _ _."
2. A-axis, B-axis, and C-axis indicate names of axes of the multi-axis servo amplifier. The C-axis is available for the 3-axis servo amplifier.
3. Contact your local sales office for the DC power input type servo amplifier.

MR-J4-GF-RJ

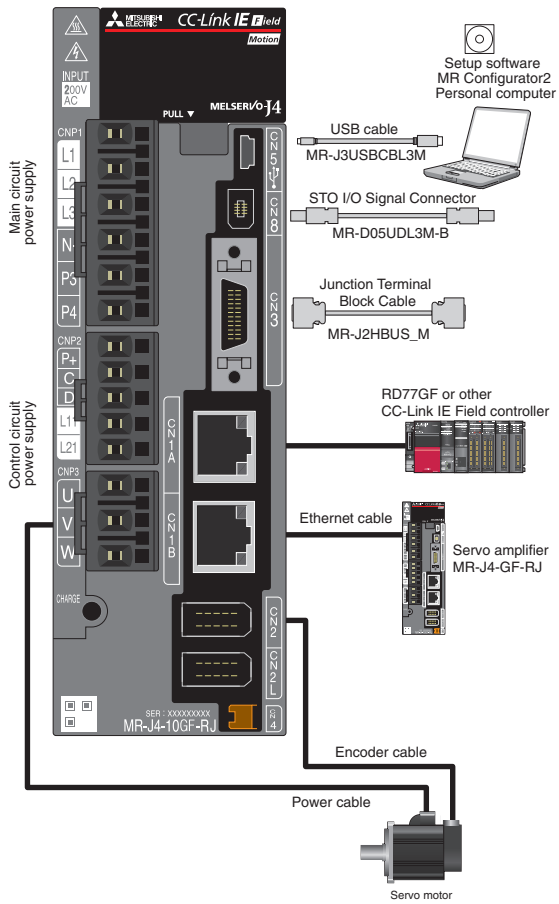

1-Axis Servo Amplifier Selection
(Example Part No. = MR-J4-60GF-RJ)

MR-J4-□GF□-RJ

Mitsubishi General Purpose AC Servo Amplifier

Symbol	Special Specification
None	Standard outside US
RJ	DC power input compatible Load-side encoder compatible Touch probe function Option unit compatible (MR-D30)
KS	RJ functions with conformal coating

Symbol	Power Supply
None	3-phase or 1-phase 200VAC to 240VAC (-RJ: AC/283VDC to 340VAC) (*1)
4	3-phase 380VAC to 480VAC (*2)

Symbol	Interface
GF	CC-Link IE Field

Symbol	Rated Output [kW]
10	0.1
20	0.2
40	0.4
60	0.6
70	0.75
100	1
200	2

Symbol	Rated Output [kW]
350	3.5
500	5
700	7
11K	11
15K	15
22K	22

Notes:
1. Servo amplifiers of 0.75 kW or smaller are available for 1-phase 200 VAC.
2. Servo amplifiers of 0.6 kW, and 1 kW or larger are available for 3-phase 400 VAC.

MR-J4-TM

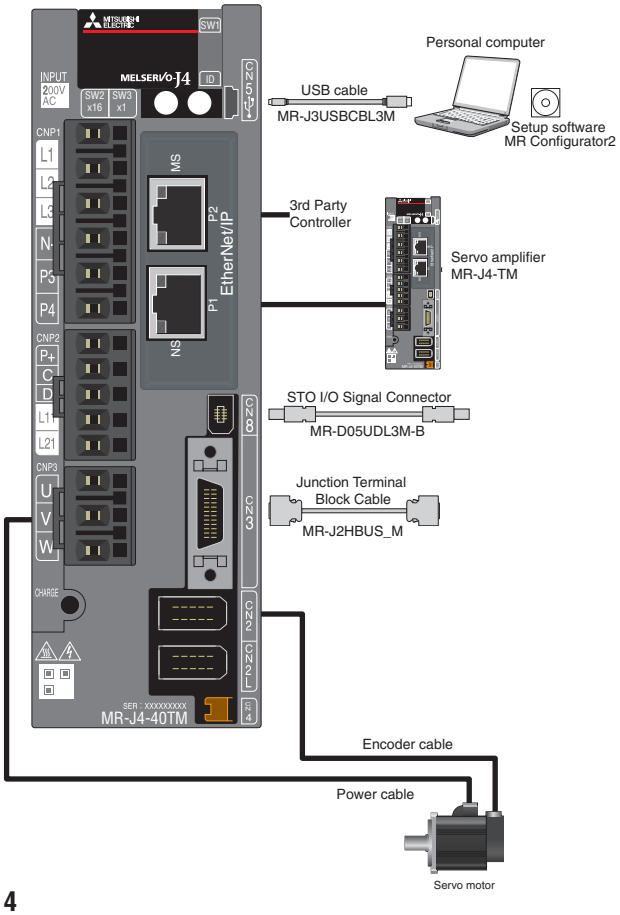

1-Axis Servo Amplifier Selection
(Example Part No. = MR-J4-10TM-ECT)

MR-J4-□TM□-□

Mitsubishi General Purpose AC Servo Amplifier

Symbol	Network
ECT	EtherCAT
EIP	EtherNET/IP
PNT	PROFINET

Symbol	Power Supply
None	3-phase 200 VAC or 1-phase 200 VAC (*1)
4	3-phase 400 VAC (*2)
1	1-phase 100 VAC (*3)

Symbol	Interface
TM	Multi-Network

Symbol	Rated Output [kW]
10	0.1
20	0.2
40	0.4
60	0.6
70	0.75
100	1
200	2
350	3.5
500	5
700	7
11K	11
15K	15
22K	22

Notes:
1. Servo amplifiers of 0.75 kW or smaller are available for 1-phase 200 VAC.
2. Servo amplifiers of 0.6 kW, and 1 kW or larger are available for 3-phase 400 VAC.
3. Servo amplifiers of 0.4 kW or smaller are available.

Drive Unit Model Designation (*2)

MR-J4-DU□□□□

Mitsubishi General Purpose AC Servo Amplifier

Symbol	Special Specification
RJ	Fully closed loop control four-wire type/load-side encoder A/B/Z-phase input compatible/ Positioning mode compatible (*1)

Symbol	Power Supply
None	3-phase 200 VAC
4	3-phase 400 VAC

Symbol	Interface
A	General Purpose
B	SSCNET III/H

Symbol	Rated Output (kW)
30K	30
37K	37
45K	45
55K	55

Converter Unit Model Designation (*2)

MR-CR55K□

Symbol	Power Supply
None	3-phase 200 VAC
4	3-phase 400 VAC

Symbol	Rated Output (kW)
55K	55

Notes:
1. Positioning mode is available with MR-J4-DU_A_-RJ drive unit.
2. One unit of converter unit is required for each drive unit.

MR-J4-GF/MR-J4-GF-RJ (CC-Link IE Field Network Interface) Specifications (200V)

Servo Amplifier Model MR-J4-_(-RJ)		10GF	20GF	40GF	60GF	70GF	100GF	200GF	350GF	500GF	700GF	11KGF	15KGF	22KGF
Stocked Item		S	S	S	S	S	S	S	S	S	S	S	S	S
Output	Rated Voltage	3-phase 170 VAC												
	Rated Current (A)	1.1	1.5	2.8	3.2	5.8	6.0	11.0	17.0	28.0	37.0	68.0	87.0	126.0
Main Circuit Power Supply	Voltage/Frequency AC Input (*1)	3-phase or 1-phase 200 VAC to 240 VAC, 50 Hz/60 Hz					3-phase or 1-phase 200 VAC to 240 VAC, 50 Hz/60 Hz (*36)		3-phase 200 VAC to 240 VAC, 50 Hz/60 Hz					
	Voltage/Frequency DC Input (*1, *38)	283 VDC to 340 VDC												
	Rated Current (A) (*25)	0.9	1.5	2.6	3.2 (*8)	3.8	5.0	10.5	16.0	21.7	28.9	46.0	64.0	95.0
	Permissible Volt. Fluctuation AC Input	3-phase or 1-phase 170 VAC to 264 VAC					3-phase or 1-phase 170 VAC to 264 VAC (*36)		3-phase 170 VAC to 264 VAC					
	Permissible Volt. Fluctuation DC Input	241 VDC to 374 VDC (*38)												
	Permissible Frequency Fluctuation	±5% maximum												
Control Circuit Power Supply	Voltage/Frequency AC Input	1-phase 200 VAC to 240 VAC, 50 Hz/60 Hz												
	Voltage/Frequency DC Input	283 VDC to 340 VDC (*38)												
	Rated Current (A)	0.2								0.3				
	Permissible Volt. Fluctuation AC Input	1-phase 170 VAC to 264 VAC												
	Permissible Volt. Fluctuation DC Input	241 VDC to 374 VDC (*38)												
	Permissible Frequency Fluctuation	±5% maximum												
	Power Consumption (W)	30								45				
Interface Power Supply		24 VDC ± 10% (required current capacity: 0.3 A (including CN8 connector signals))												
Control Method (*8)		Sine-wave PWM control/current control method												
Permissible Regenerative Power	Built-in Regenerative Resistor (*2, *3) (W)	-	10	10	10	20	20	100	100	130	170	-	-	-
	External Regenerative Resistor (Standard Accessory) [W] (Note 2, 3, 15, 16)	-	-	-	-	-	-	-	-	-	-	500 (800)	850 (1300)	850 (1300)
Dynamic Brake		Built-in (*4)										External option (*13)		
CC-Link IE Field Communication Cycle (*10)		0.5 ms, 1.0 ms, 2.0 ms, 4.0 ms												
Communication Function		USB: Connect a personal computer (MR Configurator2 compatible)												
Encoder Output Pulse		Compatible (A/B/Z-phase pulse)												
Analog Monitor		2 channels												
Positioning Mode		Point table method												
Fully Closed Loop Control	MR-J4-GF	Two-wire type communication method												
	MR-J4-GF-RJ	Two-wire/four-wire type communication method												
Load-Side Encoder Interface	MR-J4-GF	Mitsubishi Electric high-speed serial communication												
	MR-J4-GF-RJ	Mitsubishi Electric high-speed serial communication, A/B/Z-phase differential input signal												
Servo Functions		Advanced vibration suppression control II, adaptive filter II, robust filter, auto tuning, one-touch tuning, tough drive function, drive recorder function, machine diagnosis function, power monitoring function, scale measurement function, super trace control, lost motion compensation												
Protective Functions		Overcurrent shut-off, regenerative overvoltage shut-off, overload shut-off (electronic thermal), servo motor overheat protection, encoder error protection, regenerative error protection, undervoltage protection, instantaneous power failure protection, overspeed protection, error excessive protection, magnetic pole detection protection, linear servo control fault protection												
Safety Function		STO (IEC/EN 61800-5-2)												
Safety Performance	Standards Certified by CB (*34)	EN ISO 13849-1 Category 3 PL e, IEC 61508 SIL 3, EN 62061 SIL CL 3, EN 61800-5-2												
	Response Performance	8 ms or less (STO input OFF – energy shut-off)												
	Test Pulse Input (STO) (*7)	Test pulse interval: 1 Hz to 25 Hz, test pulse off time: 1 ms maximum												
	Mean Time to Dangerous Failure (MTTFd)	MTTFd ≥ 100 years (314a)												
	Diagnostic Coverage (DC)	DC = Medium, 97.6 (%)												
	Probability of Dangerous Failure Per Hour (PFH)	PHF = 6.4 x 10^{-9} [1/h]												
Compliance to Global Standards		Refer to "Conformity with Global Standards and Regulations" in the MR-J4 Servo Manual												
Structure (IP Rating)		Natural cooling, open (IP20)				Force cooling, open (IP20)				Force cooling, open (IP20) (*5)				
Close Mounting	3-Phase Power Input	Possible (*6)								Not possible				
	1-Phase Power Input	Possible (*6)					Not possible		-					
Environment	Ambient Temperature	0 °C to 55 °C (non-freezing), storage: -20°C to 65°C (non-freezing)												
	Ambient Humidity	Operation/storage: 90%RH maximum (non-condensing)												
	Ambience	Indoors (no direct sunlight); no corrosive gas, inflammable gas, oil mist or dust												
	Altitude	2000 m or less above sea level (*37)												
	Vibration Resistance	5.9 m/s^2 at 10 Hz to 55 Hz (directions of X, Y and Z axes)												
Weight (kg)		1.0	1.0	1.0	1.0	1.4	1.4	2.1	2.3	4.0	6.2	13.4	13.4	18.2

Notes: For MR-J4 Amplifier notes, please go to page 23.

MR-J4-GF4/MR-J4-GF4-RJ (CC-Link IE Field Network Interface) Specifications (400V)

Servo Amplifier Model MR-J4-_(-RJ)		60GF4	100GF4	200GF4	350GF4	500GF4	700GF4	11KGF4	15KGF4	22KGF4
Stocked Item		S	S	S	S	S	S	S	S	S
Output	Rated Voltage	3-phase 323 VAC								
	Rated Current (A)	1.5	2.8	5.4	8.6	14.0	17.0	32.0	41.0	63.0
Main Circuit Power Supply	Voltage/Frequency (*1)	3-phase 380 VAC to 480 VAC, 50 Hz/60 Hz								
	Rated Current (A)	1.4	2.5	5.1	7.9	10.8	14.4	23.1	31.8	47.6
	Permissible Voltage Fluctuation	3-phase 323 VAC to 528 VAC								
	Permissible Frequency Fluctuation	±5% maximum								
Control Circuit Power Supply Input	Voltage/Frequency	1-phase 380 VAC to 480 VAC, 50 Hz/60 Hz								
	Rated Current (A)	0.1			0.2					
	Permissible Voltage Fluctuation	1-phase 323 VAC to 528 VAC								
	Permissible Frequency Fluctuation	±5% maximum								
	Power Consumption (W)	30			45					
Interface Power Supply		24 VDC ± 10% (required current capacity: 0.3 A (including CN8 connector signals))								
Control Method		Sine-wave PWM control/current control method								
Permissible Regenerative Power	Built-in Regenerative Resistor (*2, *3) (W)	15	15	100	100	130 (*18)	170 (*18)	-	-	-
	External Regenerative Resistor (Standard Accessory) [W] (Note 2, 3, 12, 13)	-	-	-	-	-	-	500 (800)	850 (1300)	850 (1300)
Dynamic Brake		Built-in (*4)						External option (*13)		
CC-Link IE Field Communication Cycle (*10)		0.5 ms, 1.0 ms, 2.0 ms, 4.0 ms								
Communication Function		USB: Connect a personal computer (MR Configurator2 compatible)								
Encoder Output Pulse		Compatible (A/B/Z-phase pulse)								
Analog Monitor		2 channels								
Positioning Mode		Point table method								
Fully Closed Loop Control	MR-J4-GF4	Two-wire type communication method								
	MR-J4-GF4-RJ	Two-wire/four-wire type communication method								
Load-Side Encoder Interface	MR-J4-GF4	Mitsubishi Electric high-speed serial communication								
	MR-J4-GF4-RJ	Mitsubishi Electric high-speed serial communication, A/B/Z-phase differential input signal								
Servo Functions		Advanced vibration suppression control II, adaptive filter II, robust filter, auto tuning, one-touch tuning, tough drive function, drive recorder function, machine diagnosis function, power monitoring function, scale measurement function, super trace control, lost motion compensation								
Protective Functions		Overcurrent shut-off, regenerative overvoltage shut-off, overload shut-off (electronic thermal), servo motor overheat protection, encoder error protection, regenerative error protection, undervoltage protection, instantaneous power failure protection, overspeed protection, error excessive protection, magnetic pole detection protection, linear servo control fault protection								
Safety Function		STO (IEC/EN 61800-5-2)								
Safety Performance	Standards Certified by CB (*34)	EN ISO 13849-1 Category 3 PL e, IEC 61508 SIL 3, EN 62061 SIL CL 3, EN 61800-5-2								
	Response Performance	8 ms or less (STO input OFF – energy shut-off)								
	Test Pulse Input (STO) (*7)	Test pulse interval: 1 Hz to 25 Hz, test pulse off time: 1 ms maximum								
	Mean Time to Dangerous Failure (MTTFd)	MTTFd ≥ 100 years (314a)								
	Diagnostic Coverage (DC)	DC = Medium, 97.6 (%)								
	Probability of Dangerous Failure Per Hour (PFH)	PHF = 6.4 x 10^{-9} [1/h]								
Compliance to Global Standards		Refer to "Conformity with Global Standards and Regulations" in the MR-J4 Servo Manual								
Structure (IP Rating)		Natural cooling, open (IP20)		Force cooling, open (IP20)		Force cooling, open (IP20) (*5)				
Close Mounting		Not Possible								
Environment	Ambient Temperature	0 °C to 55 °C (non-freezing), storage: -20 °C to 65 °C (non-freezing)								
	Ambient Humidity	Operation/storage: 90%RH maximum (non-condensing)								
	Ambience	Indoors (no direct sunlight); no corrosive gas, inflammable gas, oil mist or dust								
	Altitude	2000 m or less above sea level (*37)								
	Vibration Resistance	5.9 m/s² at 10 Hz to 55 Hz (directions of X, Y and Z axes)								
Weight (kg)		1.7	1.7	2.1	3.6	4.3	6.5	13.4	13.4	18.2

Notes: For MR-J4 Amplifier notes, please go to page 23.

MR-J4-B(1)/MR-J4-B(1)-RJ (SSCNET III/H Interface) Specifications (200V/100V)

Servo Amplifier Model MR-J4-_(-RJ)		10B	20B	40B	60B	70B	100B	200B	350B	500B	700B	11KB	15KB	22KB	10B1	20B1	40B1
Stocked Item		S	S	S	S	S	S	S	S	S	S	S	S	S	S	S	S
Output	Rated Voltage	3-phase 170 VAC															
	Rated Current (A)	1.1	1.5	2.8	3.2	5.8	6.0	11.0	17.0	28.0	37.0	68.0	87.0	126.0	1.1	1.5	2.8
Main Circuit Power Supply	Voltage/Frequency (*1)	3-phase or 1-phase 200 VAC to 240 VAC, 50 Hz/60 Hz					3-phase 200 VAC to 240 VAC, 50/60 Hz										
	Rated Current (A) (*15)	0.9	1.5	2.6	3.2 (*8)	3.8	5.0	10.5	16.0	21.7	28.9	46.0	64.0	95.0	3.0	5.0	9.0
	Permissible Voltage Fluctuation	3-phase or 1-phase 170 VAC to 264 VAC					3-phase 170 VAC to 264 VAC								1-phase 85 VAC to 132 VAC		
	Permissible Frequency Fluctuation	±5% maximum															
Control Circuit Power Supply	Voltage/Frequency	1-phase 200 VAC to 240 VAC, 50/60 Hz													1-phase 100 VAC to 120VAC, 50Hz/60Hz		
	Rated Current (A)	0.2								0.3					0.4		
	Permissible Voltage Fluctuation	1-phase 170 VAC to 264 VAC													1-phase 85 VAC to 132 VAC		
	Permissible Frequency Fluctuation	±5% maximum															
	Power Consumption (W)	30								45					30		
Interface Power Supply		24 VDC ±10% (required current capacity: 0.3 A (including CN8 connector signals))															
Control Method (*8)		Sine-wave PWM control/current control method															
Tolerable Regenerative Power	Built-in Regenerative Resistor (*2, *3) (W)	-	10	10	10	20	20	100	100	130	170	-	-	-	-	10	10
	External Regenerative Resistor (W) (Standard Accessory) (*2, 3, 11, 12)	-	-	-	-	-	-	-	-	-	-	500 (800)	850 (1300)	850 (1300)	-	-	-
Dynamic Brake		Built-in (*4)										External option (*13)			Built-in (*4)		
SSCNET III/H Command Communication Cycle (*10)		0.222 ms, 0.444 ms, 0.888 ms															
Communication Function		USB: Connect a personal computer (MR Configurator2 compatible)															
Encoder Output Pulse		Compatible (A/B/Z-phase pulse)															
Analog Monitor		2 channels															
Servo Function		Advanced vibration suppression control II, adaptive filter II, robust filter, auto tuning, one-touch tuning, tough drive function, drive recorder function, tightening & press-fit control, machine diagnosis function, power monitoring function, master-slave operation function (*14), scale measurement function (*14), J3 compatibility mode, super trace control (*16), lost motion compensation (*16)															
Fully Closed Loop Control	MR-J4-B(1)	Two-wire type communication method (*9)															
	MR-J4-B(1)-RJ	Two-wire/four-wire type communication method															
Load-Side Encoder Interface	MR-J4-B(1)	Mitsubishi high-speed serial communication															
	MR-J4-B(1)-RJ	Mitsubishi high-speed serial communication, A/B/Z-phase differential input signal															
Protective Functions		Overcurrent shut-off, regenerative overvoltage shut-off, overload shut-off (electronic thermal), Servo Motor overheat protection, encoder error protection, regenerative error protection, undervoltage protection, instantaneous power failure protection, overspeed protection, error excessive protection, magnetic pole detection protection, linear servo control fault protection															
Safety Function (*10)		STO (IEC/EN 61800-5-2)															
Safety Performance	Standards Certified by CB	EN ISO 13849-1 Category 3 PL d, EN 61508 SIL 2, EN 62061 SIL CL 2, EN 61800-5-2 SIL 2															
	Response Performance	8 ms or less (STO input OFF - energy shut-off)															
	Test Pulse Input (STO) (*7)	Test pulse frequency: 1 Hz to 25 Hz; Test pulse off time: 1 ms maximum															
	Mean Time to Dangerous Failure (MTTFd)	100 years or longer															
	Diagnostic Coverage (DC)	Medium (90% to 99%)															
	Probability of Dangerous Failure Per Hour (PFH)	1.68×10^{-10} [1/h]															
Compliance to Standards		CE: EN 61800-5-1, EN 61800-3, EN ISO 13849-1 Category 3 PL d/EN 61508 SIL 2/ EN 62061 SIL CL 2/EN 61800-5-2 SIL 2; RoHS compliant; UL: UL508C															
Structure (IP Rating)		Natural cooling, open (IP20)				Force cooling, open (IP20)				Force cooling, open (IP20) (*5)					Natural cooling, open (IP20)		
Close Mounting		Possible (*6)								Not possible					Possible (*6)		
Environment	Ambient Temperature	0 °C to 55 °C (non-freezing), storage: -20 °C to 65 °C (non-freezing)															
	Ambient Humidity	90%RH maximum (non-condensing), storage: 90%RH maximum (non-condensing)															
	Ambience	Indoors (no direct sunlight); no corrosive gas, inflammable gas, oil mist or dust															
	Altitude	1000 m or less above sea level															
	Vibration Resistance	5.9 m/s² at 10 Hz to 55 Hz (directions of X, Y and Z axes)															
Weight (kg)		0.8	0.8	1.0	1.0	1.4	1.4	2.1	2.3	4.0	6.2	13.4	13.4	18.2	0.8	0.8	1.0

Notes: For MR-J4 Amplifier notes, please go to page 23.

MR-J4-DU_B/MR-J4-DU_B-RJ (SSCNET III/H Interface) Specifications (200V)

Model Number MR-J4-_(-RJ)		DU30KB	DU37KB
Stocked Item		-	
Compatible Converter Unit Model		MR-CR55K (*17)	
Output	Rated Voltage	3-phase 170 VAC	
	Rated Current (A)	174	204
Main Circuit Power Supply Input		Main circuit power is supplied from the converter unit to the drive unit (*17)	
Control Circuit Power Supply Input	Voltage/Frequency	1-phase 200 VAC to 240 VAC, 50 Hz/60 Hz	
	Rated Current (A)	0.3	
	Permissible Voltage Fluctuation	1-phase 170 VAC to 264 VAC	
	Permissible Frequency Fluctuation	±5% maximum	
	Power Consumption (W)	45	
Interface Power Supply		24 VDC ± 10% (required current capacity: 0.3 A (including CN8 connector signals))	
Control Method		Sine-wave PWM control/current control method	
Dynamic Brake		External option (*13)	
SSCNET III/H Command Communication Cycle		0.222 ms, 0.444 ms, 0.888 ms (*10)	
Communication Function		USB: Connect a personal computer (MR Configurator2 compatible)	
Encoder Output Pulse		Compatible (A/B/Z-phase pulse)	
Analog Monitor		2 channels	
Fully Closed Loop Control	MR-J4-DU_B	Two-wire type communication method	
	MR-J4-DU_B-RJ	Two-wire/four-wire type communication method	
Servo Function		Advanced vibration suppression control II, adaptive filter II, robust filter, auto tuning, one-touch tuning, tough drive function, drive recorder function, tightening & press-fit control, machine diagnosis function, power monitoring function, master-slave operation function, scale measurement function, J3 compatibility mode, super trace control, lost motion compensation	
Load-Side Encoder Interface	MR-J4-DU_B	Mitsubishi high-speed serial communication	
	MR-J4-DU_B-RJ	Mitsubishi high-speed serial communication, A/B/Z-phase differential input signal	
Protective Functions		Overcurrent shut-off, overload shut-off (electronic thermal), Servo Motor overheat protection, encoder error protection, undervoltage protection, instantaneous power failure protection, overspeed protection, error excessive protection	
Functional Safety		STO (IEC/EN 61800-5-2)	
Safety	Standards Certified by CB	EN ISO 13849-1 Category 3 PL d, IEC 61508 SIL 2, EN 62061 SIL CL 2, EN 61800-5-2 SIL 2	
	Response Performance	8 ms or less (STO input OFF – energy shut-off)	
	Test Pulse Input (STO) (*7)	Test pulse interval: 1 Hz to 25 Hz, test pulse off time: 1 ms maximum	
	Mean Time to Dangerous Failure (MTTFd)	100 years or longer	
	Diagnostic Coverage (DC)	Medium (90% to 99%)	
	Probability of Dangerous Failure Per Hour (PFH)	1.68×10^{-10} [1/h]	
Compliance To Standards		Refer to "Conformity with Global Standards and Regulations" in the User's Manual	
Structure (IP Rating)		Force cooling, open (IP20) (*5)	
Close Mounting		Not possible	
Environment	Ambient Temperature	Operation: 0°C to 55°C (non-freezing), storage: -20°C to 65°C (non-freezing)	
	Ambient Humidity	Operation/storage: 90%RH maximum (non-condensing)	
	Ambience	Indoors (no direct sunlight); no corrosive gas, inflammable gas, oil mist or dust	
	Altitude	1000 m or less above sea level	
	Vibration Resistance	5.9 m/s² at 10 Hz to 55 Hz (directions of X, Y and Z axes)	
Weight (kg)		21	

Notes: For MR-J4 Amplifier notes, please go to page 23.

MR-J4_TM (Multi-Networks Interface) Specifications (200V/100V)

Servo Amplifier Model MR-J4-			10TM	20TM	40TM	60TM	70TM	100TM	200TM	350TM	500TM	700TM	11KTM	15KTM	22KTM	10TM1	20TM1	40TM1
Stocked Item			S	S	S	S	S	S	S	S	S	S	S	S	S	S	S	S
Output	Rated Voltage		3-phase 170 VAC															
	Rated Current (A)		1.1	1.5	2.8	3.2	5.8	6.0	11.0	17.0	28.0	37.0	68.0	87.0	126.0	1.1	1.5	2.8
	Output Frequency		Less than 590 Hz															
	Output Frequency Accuracy		±0.01%															
Main Circuit Power Supply Input	Voltage/ Frequency	At AC Input	3-phase or 1-phase 200 VAC to 240 VAC, 50 Hz/60 Hz					3-phase or 1-phase 200 VAC to 240 VAC, 50 Hz/60 Hz (*7)		3-phase 200 VAC to 240 VAC, 50 Hz/60 Hz						1-phase 100 VAC to 120 VAC, 50Hz/60Hz		
		At DC Input	283 VDC to 340 VDC (*32)													-		
	Rated Current (*25) (A)		0.9	1.5	2.6	3.2 (*31)	3.8	5.0	10.5	16.0	21.7	28.9	46.0	64.0	95.0	3.0	5.0	9.0
	Permissible Voltage Fluctuation	At AC Input	3-phase or 1-phase 170 VAC to 264 VAC					3-phase or 1-phase 170 VAC to 264 VAC (*32)		3-phase 170 VAC to 264 VAC						1-phase 85 VAC to 132 VAC		
		At DC Input	241 VDC to 374 VDC (*32)													-		
	Permissible Frequency Fluctuation		Within ±5%															
	Power Supply Capacity (kVA)		Refer to User's Manual															
	Inrush Current (A)		Refer to User's Manual															
Control Circuit Power Supply Input	Voltage/ Frequency	At AC Input	1-phase 200 VAC to 240 VAC, 50 Hz/60 Hz													1-phase 100 VAC to 120VAC, 50Hz/60Hz		
		At DC Input	283 VDC to 340 VDC (*32)													-		
	Rated Current (A)		0.2								0.3							
	Permissible Voltage Fluctuation	At AC Input	1-phase 170 VAC to 264 VAC													1-phase 85 VAC to 1 32 VAC		
		At DC Input	241 VDC to 374 VDC (*32)													-		
	Permissible Frequency Fluctuation		Within ±5%															
	Power Consumption (W)		30								45					30		
	Inrush Current (A)		Refer to User's Manual															
Interface Power Supply	Voltage		24 VDC ±10%															
	Current Capacity (A)		0.3 (including CN8 connector signals) (*30)															
Control Method			Sine-wave PWM control, current control method															
Dynamic Brake			Built-in										External (*13, *35)			Built-in		
Fully Closed Loop Control			Compatible													Two-wire type communication method		
Load-Side Encoder Interface			Mitsubishi high-speed serial communication															
Communication Function			USB: connection to a personal computer or others (MR Configurator2-compatible)															
Encoder Output Pulses			Compatible (A/B/Z-phase pulse)															
Analog Monitor			Two channels															
Protective Functions			Overcurrent shut-off, regenerative overvoltage shut-off, overload shut-off (electronic thermal), servo motor overheat protection, encoder error protection, regenerative error protection, undervoltage protection, instantaneous power failure protection, overspeed protection, error excessive protection, magnetic pole detection protection, and linear servo control error protection															
Safety Function			STO (IEC/EN 61800-5-2)															
Safety Performance	Standards Certified by CB (*34)		EN ISO 13849-1 category 3 PL e, IEC 61508 SIL 3, EN 62061 SIL CL3, and EN 61800-5-2 SIL 3													EN ISO 13849-1 Category 3 PL d, EN 61508 SIL 2, EN 62061 SIL CL 2, EN 61800-5-2 SIL 2		
	Response Performance		8 ms or less (STO input off – energy shut off)															
	Test Pulse Input (STO) (*7)		Test pulse interval: 1 Hz to 25 Hz; Test pulse off time: Up to 1 ms															
	Mean Time to Dangerous Failure (MTTFd)		100 years or longer															
	Diagnostic Coverage (DC)		Medium (90% to 99%)															
	Probability of Dangerous Failure Per Hour (PFH)		6.40×10^{-9} [1/h]													1.68×10^{-10} [1/h]		
Compliance to Standards			CE: LVD: EN 61800-5-1, EMC: EN 61800-3, MD: EN ISO 13849-1, EN 61800-5-2, EN 62061; UL 508C													CE: EN 61800-5-1, EN 61800-3, EN ISO 13849-1 Category 3 PL d/EN 61508 SIL 2/ EN 62061 SIL CL 2/EN 61800-5-2 SIL 2; RoHS compliant; UL: UL508C		
Structure (IP Rating)			Natural cooling, open (IP20)				Force cooling, open (IP20)				Force cooling, open (IP20) (*5)					Natural cooling, open (IP20)		
Close Mounting (*6)	3-Phase Power Supply Input		Possible								Not possible					-		
	1-Phase Power Supply Input		Possible					Not possible		-								
Environment	Ambient Temperature		0 °C to 55 °C (non-freezing), storage: -20 °C to 65 °C (non-freezing)															
	Ambient Humidity		90%RH maximum (non-condensing), storage: 90%RH maximum (non-condensing)															
	Ambience		Indoors (no direct sunlight); no corrosive gas, inflammable gas, oil mist or dust															
	Altitude		2000 m or less above sea level (*33)													1000 m or less above sea level		
	Vibration Resistance		5.9 m/s² at 10 Hz to 55 Hz (directions of X, Y and Z axes)															
Weight (kg)			1.0				1.4	1.4	2.1	2.3	4.0	6.2	13.4		18.2	0.8	0.8	1.0

Notes: For MR-J4 Amplifier notes, please go to page 23.

MR-J4-B4-RJ (SSCNET III/H Interface) Specifications (400V)

Servo Amplifier Model MR-J4-_(-RJ)		60B4	100B4	200B4	350B4	500B4	700B4	11KB4	15KB4	22KB4
Stocked Item		S	S	S	S	S	S	S	S	S
Output	Rated Voltage	3-phase 323 VAC								
	Rated Current (A)	1.5	2.8	5.4	8.6	14.0	17.0	32.0	41.0	63.0
Main Circuit Power Supply	Voltage/Frequency (*1)	3-phase 380 VAC to 480 VAC, 50 Hz/60 Hz								
	Rated Current (A)	1.4	2.5	5.1	7.9	10.8	14.4	23.1	31.8	47.6
	Permissible Voltage Fluctuation	3-phase 232 VAC to 528 VAC								
	Permissible Frequency Fluctuation	±5% maximum								
Control Circuit Power Supply	Voltage/Frequency	1-phase 380 VAC to 480 VAC, 50/60 Hz								
	Rated Current (A)	0.1			0.2					
	Permissible Voltage Fluctuation	1-phase 323 VAC to 528 VAC								
	Permissible Frequency Fluctuation	±5% maximum								
	Power Consumption (W)	30			45					
Interface Power Supply		24 VDC ±10% (required current capacity: 0.3 A (including CN8 connector signals))								
Control Method (*11)		Sine-wave PWM control/current control method								
Tolerable Regenerative Power	Built-in Regenerative Resistor (*2, *3) (W)	15	15	100	100	130 (*11)	170 (*11)	-	-	-
	External Regenerative Resistor (W) (Standard Accessory) (*2, *3, *11, *12)	-	-	-	-	-	-	500 (800)	850 (1300)	850 (1300)
Dynamic Brake		Built-in (*4)						External option (*13)		
SSCNET III/H Command Communication Cycle (*10)		0.222 ms, 0.444 ms, 0.888 ms								
Communication Function		USB: Connect a personal computer (MR Configurator2 compatible)								
Encoder Output Pulse		Compatible (A/B/Z-phase pulse)								
Analog Monitor		2 channels								
Fully Closed Loop Control	MR-J4-B4	Two-wire type communication method								
	MR-J4-B4-RJ	Two-wire/four-wire type communication method								
Load-Side Encoder Interface	MR-J4-B4	Mitsubishi high-speed serial communication								
	MR-J4-B4-RJ	Mitsubishi high-speed serial communication, A/B/Z-phase differential input signal								
Servo Function		Advanced vibration suppression control II, adaptive filter II, robust filter, auto tuning, one-touch tuning, tough drive function, drive recorder function, tightening & press-fit control, machine diagnosis function, power monitoring function, master-slave operation function (*14), scale measurement function (*14), J3 compatibility mode, super trace control (*16), lost motion compensation (*16)								
Protective Functions		Overcurrent shut-off, regenerative overvoltage shut-off, overload shut-off (electronic thermal), Servo Motor overheat protection, encoder error protection, regenerative error protection, undervoltage protection, instantaneous power failure protection, overspeed protection, error excessive protection, magnetic pole detection protection, linear servo control fault protection								
Safety Function (*13)		STO (IEC/EN 61800-5-2)								
Safety Performance	Standards Certified by CE	EN ISO 13849-1 Category 3 PL d, EN 61508 SIL 2, EN 62061 SIL CL 2, EN 61800-5-2 SIL 2								
	Response Performance	8 ms or less (STO input OFF - energy shut-off)								
	Test Pulse Input (STO) (*7)	Test pulse frequency: 1 Hz to 25 Hz; Test pulse off time: 1 ms maximum								
	Mean Time to Dangerous Failure (MTTFd)	100 years or longer								
	Diagnostic Coverage (DC)	Medium (90% to 99%)								
	Probability of Dangerous Failure Per Hour (PFH)	1.68×10^{-10} [1/h]								
Compliance to Standards		CE: EN 61800-5-1, EN 61800-3, EN ISO 13849-1 Category 3 PL d/EN 61508 SIL 2/ EN 62061 SIL CL 2/EN 61800-5-2 SIL 2; RoHS compliant; UL: UL508C								
Structure (IP Rating)		Natural cooling, open (IP20)		Force cooling, open (IP20)		Force cooling, open (IP20) (*5)				
Close Mounting		Not Possible				Not possible				
Environment	Ambient Temperature	0°C to 55°C (non-freezing), storage: -20°C to 65°C (non-freezing)								
	Ambient Humidity	90% RH maximum (non-condensing), storage: 90% RH maximum (non-condensing)								
	Ambience	Indoors (no direct sunlight); no corrosive gas, inflammable gas, oil mist or dust								
	Altitude	1000 m or less above sea level								
	Vibration Resistance	5.9 m/s² at 10 Hz to 55 Hz (directions of X, Y and Z axes)								
Weight (kg)		1.7	1.7	2.1	3.6	4.3	6.5	13.4	13.4	18.2

Notes: For MR-J4 Amplifier notes, please go to page 23.

MR-J4-_TM (Multi-Network Interface) Specifications (400V)

Servo Amplifier Model MR-J4-		60TM4	100TM4	200TM4	350TM4	500TM4	700TM4	11KTM4	15KTM4	22KTM4
Stocked Item		S	S	S	S	S	S	S	S	S
Output	Rated Voltage	3-phase 323 VAC								
	Rated Current (A)	1.5	2.8	5.4	8.6	14.0	17.0	32.0	41.0	63.0
	Output Frequency	Less than 590 Hz								
	Output Frequency Accuracy	±0.01%								
Main Circuit Power Supply Input	Voltage/Frequency	3-phase 380 V AC to 480 V AC, 50 Hz/60 Hz								
	Rated Current (A)	1.4	2.5	5.1	7.9	10.8	14.4	23.1	31.8	47.6
	Permissible Voltage Fluctuation	3-phase 323 VAC to 528 VAC								
	Permissible Frequency Fluctuation	Within ±5%								
	Power Supply Capacity (kVA)	Refer to User's Manual								
	Inrush Current (A)	Refer to User's Manual								
Control Circuit Power Supply Input	Voltage/Frequency	1-phase 380 VAC to 480 VAC, 50 Hz/60 Hz								
	Rated Current (A)	0.1			0.2					
	Permissible Voltage Fluctuation	1-phase 323 VAC to 528 VAC								
	Permissible Frequency Fluctuation	Within ±5%								
	Power Consumption (W)	30			45					
	Inrush Current (A)	Refer to User's Manual								
Interface Power Supply	Voltage	24 VDC ± 10%								
	Current Capacity (A)	0.3 (including CN8 connector signals) (*30)								
Control Method		Sine-wave PWM control, current control method								
Dynamic Brake		Built-in						External (*13, *35)		
Fully Closed Loop Control		Compatible								
Load-Side Encoder Interface		Mitsubishi high-speed serial communication								
Communication Function		USB: connection to a personal computer or others (MR Configurator2-compatible)								
Encoder Output Pulses		Compatible (A/B/Z-phase pulse)								
Analog Monitor		Two channels								
Protective Functions		Overcurrent shut-off, regenerative overvoltage shut-off, overload shut-off (electronic thermal), Servo Motor overheat protection, encoder error protection, regenerative error protection, undervoltage protection, instantaneous power failure protection, overspeed protection, error excessive protection, magnetic pole detection protection, and linear servo control error protection								
Safety Function		STO (IEC/EN 61800-5-2)								
Safety Performance	Standards Certified by CB (*34)	EN ISO 13849-1 category 3 PL e, IEC 61508 SIL 3, EN 62061 SIL CL3, and EN 61800-5-2 SIL 3								
	Response Performance	8 ms or less (STO input off — energy shut off)								
	Test Pulse Input (STO)	Test pulse interval: 1 Hz to 25 Hz; Test pulse off time: Up to 1 ms								
	Mean Time to Dangerous Failure (MTTFd)	100 years or longer								
	Diagnostic Coverage (DC)	Medium (90% to 99%)								
	Probability of Dangerous Failure Per Hour (PFH)	6.40×10^{-9} [1/h]								
Compliance to Standards		CE: LVD: EN 61800-5-1, EMC: EN 61800-3, MD: EN ISO 13849-1, EN 61800-5-2, EN 62061; UL 508C								
Structure (IP Rating)		Natural cooling, open (IP20)		Force cooling, open (IP20)		Force cooling, open (IP20) (*5)				
Close Mounting		Not Possible								
Environment	Ambient Temperature	0 °C to 55 °C (non-freezing), storage: -20 °C to 65 °C (non-freezing)								
	Ambient Humidity	90%RH maximum (non-condensing), storage: 90%RH maximum (non-condensing)								
	Ambience	Indoors (no direct sunlight); no corrosive gas, inflammable gas, oil mist or dust								
	Altitude	2000 m or less above sea level (*33)								
	Vibration Resistance	5.9 m/s² at 10 Hz to 55 Hz (directions of X, Y and Z axes)								
Weight (kg)		1.7		2.1	3.6	4.3	6.5	13.4		18.2

Notes: For MR-J4 Amplifier notes, please go to page 23.

MR-J4-DU_B4/MR-J4-DU_B4-RJ (SSCNET III/H Interface) Specifications (400V)

Model Number MR-J4-_(-RJ)		DU30KB4	DU37KB4	DU45KB4	DU55KB4
Stocked Item		-	-	-	-
Compatible Converter Unit Model		MR-CR55K4 (*17)			
Output	Rated Voltage	3-phase 323 VAC			
	Rated Current (A)	87	102	131	143
Main Circuit Power Supply Input		Main circuit power is supplied from the converter unit to the drive unit (*17)			
Control Circuit Power Supply Input	Voltage/Frequency	1-phase 380 VAC to 480 VAC, 50 Hz/60 Hz			
	Rated Current (A)	0.2			
	Permissible Voltage Fluctuation	1-phase 323 VAC to 528 VAC			
	Permissible Frequency Fluctuation	±5% maximum			
	Power Consumption (W)	45			
Interface Power Supply		24 V DC ± 10% (required current capacity: 0.3 A (including CN8 connector signals))			
Control Method		Sine-wave PWM control/current control method			
Dynamic Brake		External option (*13)			
SSCNET III/H Command Communication Cycle (*10)		0.222 ms, 0.444 ms, 0.888 ms			
Communication Function		USB: Connect a personal computer (MR Configurator2 compatible)			
Encoder Output Pulse		Compatible (A/B/Z-phase pulse)			
Analog Monitor		2 channels			
Fully Closed Loop Control	MR-J4-DU_B4	Two-wire type communication method			
	MR-J4-DU_B4-RJ	Two-wire/four-wire type communication method			
Servo Function		Advanced vibration suppression control II, adaptive filter II, robust filter, auto tuning, one-touch tuning, tough drive function, drive recorder function, tightening & press-fit control, machine diagnosis function, power monitoring function, master-slave operation function, scale measurement function, J3 compatibility mode, super trace control, lost motion compensation			
Load-Side Encoder Interface	MR-J4-DU_B4	Mitsubishi Electric high-speed serial communication			
	MR-J4-DU_B4-RJ	Mitsubishi Electric high-speed serial communication, A/B/Z-phase differential input signal			
Protective Functions		Overcurrent shut-off, overload shut-off (electronic thermal), Servo Motor overheat protection, encoder error protection, undervoltage protection, instantaneous power failure protection, overspeed protection, error excessive protection			
Functional Safety		STO (IEC/EN 61800-5-2)			
Safety	Standards Certified by CB	EN ISO 13849-1 Category 3 PL d, IEC 61508 SIL 2, EN 62061 SIL CL 2, EN 61800-5-2 SIL 2			
	Response Performance	8 ms or less (STO input OFF – energy shut-off)			
	Test Pulse Input (STO) (*7)	Test pulse interval: 1 Hz to 25 Hz, test pulse off time: 1 ms maximum			
	Mean Time to Dangerous Failure (MTTFd)	100 years or longer			
	Diagnostic Coverage (DC)	Medium (90% to 99%)			
	Probability of Dangerous Failure Per Hour (PFH)	1.68×10^{-10} [1/h]			
Compliance To Standards		Refer to "Conformity with Global Standards and Regulations" in the User's Manual			
Structure (IP Rating)		Force cooling, open (IP20) (*5)			
Close Mounting		Not possible			
Environment	Ambient Temperature	Operation: 0°C to 55°C (non-freezing), storage: -20°C to 65°C (non-freezing)			
	Ambient Humidity	Operation/storage: 90%RH maximum (non-condensing)			
	Ambience	Indoors (no direct sunlight); no corrosive gas, inflammable gas, oil mist or dust			
	Altitude	1000 m or less above sea level			
	Vibration Resistance	5.9 m/s² at 10 Hz to 55 Hz (directions of X, Y and Z axes)			
Weight (kg)		16		19	

Notes: For MR-J4 Amplifier notes, please go to page 23.

MR-CR Converter Unit Specifications (200V/400V)

Converter Unit Model		MR-CR55K	MR-CR55K4
Stocked Item		-	-
Output	Rated Voltage	270 VDC to 324 VDC	513 VDC to 648 VDC
	Rated Current (A)	215.9	113.8
Main Circuit Power Supply	Voltage/Frequency (*1)	3-phase 200 VAC to 240 VAC, 50 Hz/60 Hz	3-phase 380 VAC to 480 VAC, 50 Hz/60 Hz
	Rated Current (A)	191.3	100.7
	Permissible Voltage Fluctuation	3-phase 170 VAC to 264 VAC	3-phase 323 VAC to 528 VAC
	Permissible Frequency Fluctuation	±5% maximum	
Control Circuit Power Supply	Voltage/Frequency	1-phase 200 VAC to 240 VAC, 50 Hz/60 Hz	1-phase 380 VAC to 480 VAC, 50 Hz/60 Hz
	Rated Current (A)	0.3	0.2
	Permissible Voltage Fluctuation	1-phase 170 VAC to 264 VAC	1-phase 323 VAC to 528 VAC
	Permissible Frequency Fluctuation	±5% maximum	
	Power Consumption (W)	45	
Interface Power Supply		24 VDC ± 10% (required current capacity: 0.15 A)	
Rated Output (kW)		55	
Regenerative Power (When Regenerative Option is Used)		1300 W (one unit of MR-RB139) 3900 W (three units of MR-RB137)	1300 W (one unit of MR-RB137-4) 3900 W (three units of MR-RB13V-4)
Protective Functions		Regenerative overvoltage shut-off, overload shut-off (electronic thermal), regenerative error protection, undervoltage protection, instantaneous power failure protection	
Compliance to Standards		Refer to "Conformity with Global Standards and Regulations" in User's Guide	
Structure		Force cooling, open (IP20) (*2)	
Environment	Ambient Temperature	Operation: 0°C to 55°C (non-freezing), storage: -20°C to 65°C (non-freezing)	
	Ambient Humidity	Operation/storage: 90%RH maximum (non-condensing)	
	Ambience	Indoors (no direct sunlight); no corrosive gas, inflammable gas, oil mist or dust	
	Altitude	1000 m or less above sea level	
	Vibration Resistance	5.9 m/s^2 at 10 Hz to 55 Hz (directions of X, Y and Z axes)	
Weight (kg)		22	

Notes:
1. Rated output and speed of a rotary Servo Motor are applicable when the servo amplifier, combined with the rotary Servo Motor, is operated within the specified power supply voltage and frequency.
2. Terminal blocks are excluded.

MR-J4W2-B (2-Axis, SSCNET III/H Interface) Specifications (200V)

Servo Amplifier Model MR-J4W2-			22B	44B	77B	1010B
Stocked Item			S	S	S	S
Output	Rated Voltage		3-phase 170 VAC			
	Rated Current (Each Axis) (A)		1.5	2.8	5.8	6.0
Main Circuit Power Supply	Voltage/Frequency (*1)		3-phase or 1-phase 200 VAC to 240 VAC, 50/60 Hz			3-phase 200 VAC to 240 VAC, 50/60 Hz
	Rated Current (A) (*25)		2.9	5.2	7.5	9.8
	Permissible Voltage Fluctuation		3-phase or 1-phase 170 VAC to 264 VAC			3-phase 170 VAC to 264 VAC
	Permissible Frequency Fluctuation		±5% maximum			
Control Circuit Power Supply	Voltage/Frequency		1-phase 200 VAC to 240 VAC, 50/60 Hz			
	Rated Current (A)		0.4			
	Permissible Voltage Fluctuation		1-phase 170 VAC to 264 VAC			
	Permissible Frequency Fluctuation		±5% maximum			
	Power Consumption (W)		55			
Interface Power Supply			24 VDC ±10% (required current capacity: 0.35 A (including CN8 connector signals))			
Control Method			Sine-wave PWM control/current control method			
Capacitor Regeneration	Reusable Regeneration Energy (J) (W) (*19)		17	21	44	
	Moment of Inertia (J) Equivalent to Permissible Charging Amount ($\times 10^{-4}$ kg•m^2) (*20)		3.45	4.26	8.92	
	Mass Equivalent to Permissible Charging Amount (kg) (*21)	LM-H3	3.8	4.7	9.8	
		LM-K2 LM-U2	8.5	10.5	22.0	
Tolerable Regenerative Power of the Built-in Regenerative Resistor (*2, *3) (W)			20		100	
Dynamic Brake			Built-in (*4)			
SSCNET III/H Command Communication Cycle (*10)			0.222 ms, 0.444 ms, 0.888 ms			
Communication Function			USB: Connect a personal computer (MR Configurator2 compatible)			
Encoder Output Pulse			Compatible (A/B-phase pulse)			
Analog Monitor			None			
Fully Closed Loop Control (*24)			Available (*9)			
Load-Side Encoder Interface (*22)			Mitsubishi high-speed serial communication			
Protective Functions			Overcurrent shut-off, regenerative overvoltage shut-off, overload shut-off (electronic thermal), Servo Motor overheat protection, encoder error protection, regenerative error protection, undervoltage protection, instantaneous power failure protection, overspeed protection, error excessive protection, magnetic pole detection protection, linear servo control fault protection			
Servo Function			Advanced vibration suppression control II, adaptive filter II, robust filter, auto tuning, one-touch tuning, tough drive function, drive recorder function, tightening & press-fit control, machine diagnosis function, power monitoring function, scale measurement function (*14), J3 compatibility mode			
Safety Function			STO (IEC/EN 61800-5-2) (*23)			
Safety Performance	Standards Certified by CB		EN ISO 13849-1 Category 3 PL d, EN 61508 SIL 2, EN 62061 SIL CL 2, EN 61800-5-2 SIL 2			
	Response Performance		8 ms or less (STO input OFF — energy shut-off)			
	Test Pulse Input (STO) (*7)		Test pulse frequency: 1 Hz to 25 Hz; Test pulse off time: 1 ms maximum			
	Mean Time to Dangerous Failure (MTTFd)		100 years or longer			
	Average Diagnostic Coverage (DCavg)		Medium (90% to 99%)			
	Probability of Dangerous Failure Per Hour (PFH)		1.68×10^{-10} [1/h]			
Compliance to Standards			CE: EN 61800-5-1, EN 61800-3, EN ISO 13849-1 Category 3 PL d/EN 61508 SIL 2/ EN 62061 SIL CL 2/EN 61800-5-2 SIL 2; RoHS compliant; UL: UL508C			
Structure (IP Rating)			Natural cooling, open (IP20)	Force cooling, open (IP20)		
Close Mounting			Possible			
Environment	Ambient Temperature		0 °C to 55 °C (non-freezing), storage: -20 °C to 65 °C (non-freezing)			
	Ambient Humidity		90%RH maximum (non-condensing), storage: 90%RH maximum (non-condensing)			
	Ambience		Indoors (no direct sunlight); no corrosive gas, inflammable gas, oil mist or dust			
	Altitude		1000 m or less above sea level			
	Vibration Resistance		5.9 m/s^2 at 10 Hz to 55 Hz (directions of X, Y and Z axes)			
Weight (kg)			1.5	1.5	2.0	2.0

Notes: For MR-J4 Amplifier notes, please go to page 23.

MR-J4W2-0303B6 (2-Axis, SSCNET III/H Interface) Specifications

Servo Amplifier Model		MR-J4W2-0303B6
Stocked Item		S
Output	Rated Voltage	3-phase 13 VAC
	Rated Current (Each Axis) (A)	2.4
Main Circuit Power Supply	Voltage (*1)	48 V DC/24 VDC (*39)
	Rated Current (A)	For 48 VDC: 2.4 A; For 24 VDC: 4.8 A
	Permissible Voltage Fluctuation	For 48 VDC: 40.8 VDC to 55.2 VDC; For 24 VDC: 21.6 VDC to 26.4 VDC
Control Circuit Power Supply	Voltage	24 VDC
	Rated Current (A)	0.5
	Permissible Voltage Fluctuation	21.6 VDC to 26.4 VDC
	Power Consumption (W)	10
Interface Power Supply		24 VDC ± 10% (required current capacity: 0.25 A)
Control Method		Sine-wave PWM control/current control method
Capacitor Regeneration	Reusable Regeneration Energy (J) (W) (*19)	0.9
	Moment of Inertia (J) Equivalent to Permissible Charging Amount ($\times 10^{-4}$ kg•m^2) (*20)	0.18
Permissible Regenerative Power of the Built-in Regenerative Resistor (W)		1.3
Dynamic Brake		Built-in (*4, *40)
SSCNET III/H Command Communication Cycle (*10)		0.222 ms, 0.444 ms, 0.888 ms
Communication Function		USB: Connect a personal computer (MR Configurator2 compatible)
Encoder Output Pulse		Compatible (A/B-phase pulse)
Analog Monitor		2 channels
Fully Closed Loop Control		Not compatible
Protective Functions		Overcurrent shut-off, regenerative overvoltage shut-off, overload shut-off (electronic thermal), servo motor overheat protection, encoder error protection, regenerative error protection, undervoltage protection, instantaneous power failure protection, overspeed protection, error excessive protection
Servo Function		Advanced vibration suppression control II, adaptive filter II, robust filter, auto tuning, one-touch tuning, vibration tough drive function, drive recorder function, tightening & press-fit control, machine diagnosis function, power monitoring function, J3 compatibility mode
Compliance to Standards		Refer to "Conformity with Global Standards and Regulations" in the Instruction Manual
Structure (IP Rating)		Natural cooling, open (IP20)
Close Mounting		Possible (*6)
Environment	Ambient Temperature	Operation: 0 °C to 55 °C (non-freezing), storage: -20 °C to 65 °C (non-freezing)
	Ambient Humidity	Operation/storage: 90 %RH maximum (non-condensing)
	Ambience	Indoors (no direct sunlight); no corrosive gas, inflammable gas, oil mist or dust
	Altitude	1000 m or less above sea level
	Vibration Resistance	5.9 m/s^2 at 10 Hz to 55 Hz (directions of X, Y and Z axes)
Weight (kg)		0.3

Notes: For MR-J4 Amplifier notes, please go to page 23.

MR-J4W3-B (3-Axis, SSCNET III/H Interface) Specifications (200V)

Servo Amplifier Model MR-J4W3-			222B	444B
Stocked Item			S	S
Output	Rated Voltage		3-phase 170 VAC	
	Rated Current (A)		1.5	2.8
Main Circuit Power Supply	Voltage/Frequency (*1)		3-phase or 1-phase 200 VAC to 240 VAC, 50/60 Hz	
	Rated Current (A) (*25)		4.3	7.8
	Permissible Voltage Fluctuation		3-phase or 1-phase 170 VAC to 264 VAC	
	Permissible Frequency Fluctuation		±5% maximum	
Control Circuit Power Supply	Voltage/Frequency		1-phase 200 VAC to 240 VAC, 50/60 Hz	
	Rated Current (A)		0.4	
	Permissible Voltage Fluctuation		1-phase 170 VAC to 264 VAC	
	Permissible Frequency Fluctuation		±5% maximum	
	Power Consumption (W)		55	
Interface Power Supply			24 VDC ±10% (required current capacity: 0.45 A (including CN8 connector signals))	
Capacitor Regeneration	Reusable Regenerative Energy (J) (*19)		21	30
	Moment of inertia (J) Equivalent to Permissible Charging Amount ($\times 10^{-4}$ kg•m^2) (*20)		4.26	6.08
	Mass Equivalent to Permissible Charging Amount (kg) (*21)	LM-H3	4.7	6.7
		LM-K2 LM-U2	10.5	15.0
Tolerable Regenerative Power of the Built-in Regenerative Resistor (*2, *3) (W)			30	
Control Method			Sine-wave PWM control/current control method	
Dynamic Brake			Built-in (*4)	
SSCNET III/H Command Communication Cycle (*10)			0.222 ms (*26), 0.444 ms, 0.888 ms	
Communication Function			USB: Connect a personal computer (MR Configurator2 compatible)	
Encoder Output Pulse			Not compatible	
Analog Monitor			None	
Fully Closed Loop Control			Not compatible	
Protective Functions			Overcurrent shut-off, regenerative overvoltage shut-off, overload shut-off (electronic thermal), Servo Motor overheat protection, encoder error protection, regenerative error protection, undervoltage protection, instantaneous power failure protection, overspeed protection, error excessive protection, magnetic pole detection protection, linear servo control fault protection	
Servo Function			Advanced vibration suppression control II, adaptive filter II, robust filter, auto tuning, one-touch tuning, tough drive function, drive recorder function, tightening & press-fit control, machine diagnosis function, power monitoring function, J3 compatibility mode	
Safety Function			STO (IEC/EN 61800-5-2) (*23)	
Safety Performance	Standards Certified by CB		EN ISO 13849-1 Category 3 PL d, EN 61508 SIL 2, EN 62061 SIL CL 2, EN 61800-5-2 SIL 2	
	Response Performance		8 ms or less (STO input OFF – energy shut-off)	
	Test Pulse Input (STO) (*7)		Test pulse frequency: 1 Hz to 25 Hz; Test pulse off time: 1 ms maximum	
	Mean Time to Dangerous Failure (MTTFd)		100 years or longer	
	Diagnostic Coverage (DCavg)		Medium (90% to 99%)	
	Probability of Dangerous Failure Per Hour (PFH)		1.68×10^{-10} [1/h]	
Compliance to Standards			LVD: EN 61800-5-1; EMC: EN 61800-3; MD: EN ISO 13849-1, EN 61800-5-2, EN 62061	
Structure (IP Rating)			Forced cooling, open (IP20)	
Close Mounting			Possible	
Environment	Ambient Temperature		0°C to 55°C (non-freezing), storage: -20°C to 65°C (non-freezing)	
	Ambient Humidity		90%RH maximum (non-condensing), storage: 90%RH maximum (non-condensing)	
	Ambience		Indoors (no direct sunlight); no corrosive gas, inflammable gas, oil mist or dust	
	Altitude		1000 m or less above sea level	
	Vibration Resistance		5.9 m/s^2 at 10 Hz to 55 Hz (directions of X, Y and Z axes)	
Weight (kg)			1.9	1.9

Notes: For MR-J4 Amplifier notes, please go to page 23.

MR-J4-A(1)/MR-J4-A(1)-RJ (General-purpose Interface) Specifications (200V/100V)

Servo Amplifier Model MR-J4-_-RJ		10A	20A	40A	60A	70A	100A	200A	350A	500A	700A	11KA	15KA	22KA	10A1	20A1	40A1
Stocked Item		S	S	S	S	S	S	S	S	S	S	S	S	S	S	S	S
Output	Rated Voltage	3-phase 170 VAC															
	Rated Current (A)	1.1	1.5	2.8	3.2	5.8	6.0	11.0	17.0	28.0	37.0	68.0	87.0	126.0	1.1	1.5	2.8
Main Circuit Power Supply	Voltage/Frequency (*1)	3-phase or 1-phase 200VAC to 240 VAC, 50/60 Hz					3-phase 200 VAC to 240 VAC, 50/60 Hz								1-phase 100 VAC to 120 VAC, 50 Hz/60 Hz		
	Rated Current (A) (*14)	0.9	1.5	2.6	3.2 (*8)	3.8	5.0	10.5	16.0	21.7	28.9	46.0	64.0	95.0	3.0	5.0	9.0
	Permissible Voltage Fluctuation	3-phase or 1-phase 170 VAC to 264 VAC					3-phase 170 VAC to 264 VAC								1-phase 85 VAC to 132 VAC		
	Permissible Frequency Fluctuation	±5% maximum															
Control Circuit Power Supply	Voltage/Frequency	1-phase 200 VAC to 240 VAC, 50/60 Hz													1-phase 100 VAC to 120 VAC, 50 Hz/60 Hz		
	Rated Current (A)	0.2								0.3					0.4		
	Permissible Voltage Fluctuation	1-phase 170 VAC to 264 VAC													1-phase 85 VAC to 132 VAC		
	Permissible Frequency Fluctuation	±5% maximum															
	Power Consumption (W)	30								45					30		
Interface Power Supply		24 VDC ±10% (required current capacity: 0.5 A (including CN8 connector signal))															
Control Method		Sine-wave PWM control/current control method															
Tolerable Regenerative Power	Built-in Regenerative Resistor (*2, *3) (W)	-	10	10	10	20	20	100	100	130	170	-	-	-	-	10	10
	External Regenerative Resistor (Standard Accessory) (*2, 3, 11, 12)	-	-	-	-	-	-	-	-	-	-	500 (800)	850 (1300)	850 (1300)	-	-	-
Dynamic Brake		Built-in (*4)										External option (*13)			Built-in (*4)		
Communication Function		USB: Connect a personal computer (MR Configurator2 compatible); RS-422: 1 : n communication (up to 32 axes) (*28)															
Encoder Output Pulse		Compatible (A/B/Z-phase pulse)															
Analog Monitor		2 channels															
Protective Functions		Overcurrent shut-off, regenerative overvoltage shut-off, overload shut-off (electronic thermal), Servo Motor overheat protection, encoder error protection, regenerative error protection, undervoltage protection, instantaneous power failure protection, overspeed protection, error excessive protection, magnetic pole detection protection, linear servo control fault protection															
Position Control Mode	Maximum Input Pulse Frequency	4 Mpps (when using differential receiver), 200 kpps (when using open-collector)															
	Positioning Feedback Pulse	Encoder resolution: 22 bits															
	Command Pulse Multiplying Factor	Electronic gear A/B multiple, A: 1 to 16777215, B: 1 to 16777215, 1/10 < A/B < 4000															
	Positioning Complete Width Setting	0 pulse to ±65535 pulses (command pulse unit)															
	Error Excessive	±3 rotations															
	Torque Limit	Set by parameters or external analog input (0 VDC to +10 VDC/maximum torque)															
Speed Control Mode	Speed Control Range	Analog speed command 1:2000, internal speed command 1:5000															
	Analog Speed Command Input	0 VDC to ±10 VDC/rated speed (Speed at 10 V is changeable with [Pr. PC12])															
	Speed Fluctuation Rate	±0.01% maximum (load fluctuation 0% to 100%), 0% (power fluctuation: ±10%) ±0.2% maximum (ambient temperature: 25°C ± 10°C) only when using analog speed command															
	Torque Limit	Set by parameters or external analog input (0 VDC to +10 VDC/maximum torque)															
Torque Control Mode	Analog Torque Command Input	0 VDC to ±8 VDC/maximum torque (input impedance: 10 kΩ to 12 kΩ)															
	Speed Limit	Set by parameters or external analog input (0 VDC to ± 10 VDC/rated speed)															
Fully Closed Loop Control	MR-J4-A(1)	Two-wire type communication method (*9)															
	MR-J4-A(1)-RJ	Two-wire/four-wire type communication method															
Load-Side Encoder Interface	MR-J4-A(1)	Mitsubishi high-speed serial communication															
	MR-J4-A(1)-RJ	Mitsubishi high-speed serial communication, A/B/Z-phase differential input signal															
Servo Function		Advanced vibration suppression control II, adaptive filter II, robust filter, auto tuning, one-touch tuning, tough drive function, drive recorder function, machine diagnosis function, power monitoring function, super trace control (Note 15), lost motion compensation (*15)															
Functional Safety		STO (IEC/EN 61800-5-2)															
Safety Performance	Standards Certified by CB	EN ISO 13849-1 Category 3 PL d, EN 61508 SIL 2, EN 62061 SIL CL 2, EN 61800-5-2 SIL 2															
	Response Performance	8 ms or less (STO input OFF — energy shut-off)															
	Test Pulse Input (STO) (*7)	Test pulse frequency: 1 Hz to 25 Hz; Test pulse off time: 1 ms maximum															
	Mean Time to Dangerous Failure (MTTFd)	100 years or longer															
	Diagnostic Coverage (DCavg)	Medium (90% to 99%)															
	Probability of Dangerous Failure Per Hour (PFH)	1.68×10^{-10} [1/h]															
Compliance to Standards		CE: EN 61800-5-1, EN 61800-3, EN ISO 13849-1 Category 3 PL d/EN 61508 SIL 2/ EN 62061 SIL CL 2/EN 61800-5-2 SIL 2; RoHS compliant; UL: UL508C															
Structure (IP Rating)		Natural cooling, open (IP20)				Force cooling, open (IP20)				Force cooling, open (IP20) (*5)					Natural cooling, open (IP20)		
Close Mounting		Possible (*6)								Not possible					Possible (*6)		
Environment	Ambient Temperature	0°C to 55°C (non-freezing), storage: -20°C to 65°C (non-freezing)															
	Ambient Humidity	90% RH maximum (non-condensing), storage: 90% RH maximum (non-condensing)															
	Ambience	Indoors (no direct sunlight); no corrosive gas, inflammable gas, oil mist or dust															
	Altitude	1000 m or less above sea level															
	Vibration Resistance	5.9 m/s² at 10 Hz to 55 Hz (directions of X, Y and Z axes)															
Weight (kg)		0.8	0.8	1.0	1.0	1.4	1.4	2.1	2.3	4.0	6.2	13.4	13.4	18.2	0.8	0.8	1.0

Notes: For MR-J4 Amplifier notes, please go to page 23.

MR-J4-DU_A/MR-J4-DU_A-RJ (General-Purpose Interface) Specifications (200V)

Drive Unit Model MR-J4-_(-RJ)		DU30KA	DU37KA
Stocked Item		-	-
Compatible Converter Unit Model		MR-CR55K (*29)	
Output	Rated Voltage	3-phase 170 VAC	
	Rated Current (A)	174	204
Main Circuit Power Supply Input		Main circuit power is supplied from the converter unit to the drive unit (*29)	
Control Circuit Power Supply Input	Voltage/Frequency	1-phase 200 VAC to 240 VAC, 50/60 Hz	
	Rated Current (A)	0.3	
	Permissible Voltage Fluctuation	1-phase 170 VAC to 264 VAC	
	Permissible Frequency Fluctuation	±5% maximum	
	Power Consumption (W)	45	
Interface Power Supply		24 VDC ±10% (required current capacity: 0.5 A (including CN8 connector signal))	
Control Method		Sine-wave PWM control/current control method	
Dynamic Brake		External option (*13)	
Communication Function		USB: Connect a personal computer (MR Configurator2 compatible); RS-422: 1 : n communication (up to 32 axes)	
Encoder Output Pulse		Compatible (A/B/Z-phase pulse)	
Analog Monitor		2 channels	
Protective Functions		Overcurrent shut-off, overload shut-off (electronic thermal), Servo Motor overheat protection, encoder error protection, undervoltage protection, instantaneous power failure protection, overspeed protection, error excessive protection	
Position Control Mode	Maximum Input Pulse Frequency	4 Mpps (when using differential receiver), 200 kpps (when using open-collector)	
	Positioning Feedback Pulse	Encoder resolution: 22 bits	
	Command Pulse Multiplying Factor	Electronic gear A/B multiple, A: 1 to 16777215, B: 1 to 16777215, 1/10 < A/B < 4000	
	Positioning Complete Width Setting	0 pulse to ±65535 pulses (command pulse unit)	
	Error Excessive	±3 rotations	
	Torque Limit	Set by parameters or external analog input (0 VDC to +10 VDC/maximum torque)	
Speed Control Mode	Speed Control Range	Analog speed command 1:2000, internal speed command 1:5000	
	Analog Speed Command Input	0 VDC to ±10 VDC/rated speed (Speed at 10 V is changeable with [Pr. PC12])	
	Speed Fluctuation Rate	±0.01% maximum (load fluctuation 0% to 100%), 0% (power fluctuation: ±10%) ±0.2% maximum (ambient temperature: 25°C ± 10°C) only when using analog speed command	
	Torque Limit	Set by parameters or external analog input (0 VDC to +10 VDC/maximum torque)	
Torque Control Mode	Analog Torque Command Input	0 VDC to ±8 VDC/maximum torque (input impedance: 10 kΩ to 12 kΩ)	
	Speed Limit	Set by parameters or external analog input (0 VDC to ± 10 VDC/rated speed)	
Positioning Mode		Point table method, program method, indexer (turret) meth	
Fully Closed Loop Control	MR-J4-DU_A	Two-wire type communication method (*9)	
	MR-J4-DU_A-RJ	Two-wire/four-wire type communication method	
Load-Side Encoder Interface	MR-J4-DU_A	Mitsubishi Electric high-speed serial communication	
	MR-J4-DU_A-RJ	Mitsubishi Electric high-speed serial communication, A/B/Z-phase differential input signal	
Servo Function		Advanced vibration suppression control II, adaptive filter II, robust filter, auto tuning, one-touch tuning, tough drive function, drive recorder function, machine diagnosis function, power monitoring function, super trace control, lost motion compensation	
Functional Safety		STO (IEC/EN 61800-5-2)	
Safety Performance	Standards Certified by CB	EN ISO 13849-1 Category 3 PL d, EN 61508 SIL 2, EN 62061 SIL CL 2, EN 61800-5-2 SIL 2	
	Response Performance	8 ms or less (STO input OFF — energy shut-off)	
	Test Pulse Input (STO) (*7)	Test pulse interval: 1 Hz to 25 Hz, test pulse off time: 1 ms maximum	
	Mean Time to Dangerous Failure (MTTFd)	100 years or longer	
	Diagnostic Coverage (DCavg)	Medium (90% to 99%)	
	Probability of Dangerous Failure Per Hour (PFH)	1.68×10^{-10} [1/h]	
Compliance to Standards		Refer to "Conformity with Global Standards and Regulations" in the User's Manual	
Structure (IP Rating)		Force cooling, open (IP20) (*5)	
Close Mounting		Not possible	
Environment	Ambient Temperature	0°C to 55°C (non-freezing), storage: -20°C to 65°C (non-freezing)	
	Ambient Humidity	90% RH maximum (non-condensing), storage: 90% RH maximum (non-condensing)	
	Ambience	Indoors (no direct sunlight); no corrosive gas, inflammable gas, oil mist or dust	
	Altitude	1000 m or less above sea level	
	Vibration Resistance	5.9 m/s² at 10 Hz to 55 Hz (directions of X, Y and Z axes)	
Weight (kg)		21	

Notes: For MR-J4 Amplifier notes, please go to page 23.

MR-J4-A4/MR-J4-A4-RJ (General-Purpose Interface) Specifications (400V)

Servo Amplifier Model MR-J4-_(-RJ)		60A4	100A4	200A4	350A4	500A4	700A4	11KA4	15KA4	22KA4
Stocked Item		S	S	S	S	S	S	-	-	-
Output	Rated Voltage	3-phase 323 VAC								
	Rated Current (A)	1.5	2.8	5.4	8.6	14.0	17.0	32.0	41.0	63.0
Main Circuit Power Supply	Voltage/Frequency (*1)	3-phase 380VAC to 480VAC, 50/60 Hz								
	Rated Current (A)	1.4	2.5	5.1	7.9	10.8	14.4	23.1	31.8	47.6
	Permissible Voltage Fluctuation	3-phase 323 VAC to 528 VAC								
	Permissible Frequency Fluctuation	±5% maximum								
Control Circuit Power Supply	Voltage/Frequency	1-phase 380 VAC to 480 VAC, 50/60 Hz								
	Rated Current (A)	0.1			0.2					
	Permissible Voltage Fluctuation	1-phase 323 VAC to 528 VAC								
	Permissible Frequency Fluctuation	±5% maximum								
	Power Consumption (W)	30			45					
Interface Power Supply		24 VDC ±10% (required current capacity: 0.5 A (including CN8 connector signal))								
Control Method		Sine-wave PWM control/current control method								
Tolerable Regenerative Power	Built-in Regenerative Resistor (*2, *3) (W)	15	15	100	100	130 (*18)	170 (*18)	-	-	-
	External Regenerative Resistor (W) (Standard Accessory) (*2, 3, 11, 12)	-	-	-	-	-	-	500 (800)	850 (1300)	850 (1300)
Dynamic Brake		Built-in (*4)						External option (*13)		
Communication Function		USB: Connect a personal computer (MR Configurator2 compatible); RS-422: 1 : n communication (up to 32 axes)								
Encoder Output Pulse		Compatible (A/B/Z-phase pulse)								
Analog Monitor		2 channels								
Protective Functions		Overcurrent shut-off, regenerative overvoltage shut-off, overload shut-off (electronic thermal), Servo Motor overheat protection, encoder error protection, regenerative error protection, undervoltage protection, instantaneous power failure protection, overspeed protection, error excessive protection, magnetic pole detection protection, linear servo control fault protection								
Position Control Mode	Maximum Input Pulse Frequency	4 Mpps (when using differential receiver), 200 kpps (when using open-collector)								
	Positioning Feedback Pulse	Encoder resolution: 22 bits								
	Command Pulse Multiplying Factor	Electronic gear A/B multiple, A: 1 to 16777215, B: 1 to 16777215, 1/10 < A/B < 4000								
	Positioning Complete Width Setting	0 pulse to ±65535 pulses (command pulse unit)								
	Error Excessive	±3 rotations								
	Torque Limit	Set by parameters or external analog input (0 VDC to +10 VDC/maximum torque)								
Speed Control Mode	Speed Control Range	Analog speed command 1:2000, internal speed command 1:5000								
	Analog Speed Command Input	0 VDC to ±10 VDC/rated speed (Speed at 10 V is changeable with [Pr. PC12])								
	Speed Fluctuation Rate	±0.01% maximum (load fluctuation 0% to 100%), 0% (power fluctuation: ±10%) ±0.2% maximum (ambient temperature: 25°C ± 10°C) only when using analog speed command								
	Torque Limit	Set by parameters or external analog input (0 VDC to +10 VDC/maximum torque)								
Torque Control Mode	Analog Torque Command Input	0 VDC to ±8 VDC/maximum torque (input impedance: 10 kΩ to 12 kΩ)								
	Speed Limit	Set by parameters or external analog input (0 VDC to ± 10 VDC/rated speed)								
Fully Closed Loop Control	MR-J4-A4	Two-wire type communication method								
	MR-J4-A4-RJ	Two-wire/four-wire type communication method								
Load-Side Encoder Interface	MR-J4-A4	Mitsubishi high-speed serial communication								
	MR-J4-A4-RJ	Mitsubishi high-speed serial communication, A/B/Z-phase differential input signal								
Servo Function		Advanced vibration suppression control II, adaptive filter II, robust filter, auto tuning, one-touch tuning, tough drive function, drive recorder function, machine diagnosis function, power monitoring function, super trace control (*16), lost motion compensation (*16)								
Safety Function		STO (IEC/EN 61800-5-2)								
Safety Performance	Standards Certified by CB	EN ISO 13849-1 Category 3 PL d, EN 61508 SIL 2, EN 62061 SIL CL 2, EN 61800-5-2 SIL 2								
	Response Performance	8 ms or less (STO input OFF — energy shut-off)								
	Test Pulse Input (STO) (*7)	Test pulse frequency: 1 Hz to 25 Hz; Test pulse off time: 1 ms maximum								
	Mean Time to Dangerous Failure (MTTFd)	100 years or longer								
	Diagnostic Coverage (DCavg)	Medium (90% to 99%)								
	Probability of Dangerous Failure Per Hour (PFH)	1.68×10^{-10} [1/h]								
Compliance to Standards		CE: EN 61800-5-1, EN 61800-3, EN ISO 13849-1 Category 3 PL d/EN 61508 SIL 2/ EN 62061 SIL CL 2/EN 61800-5-2 SIL 2; RoHS compliant; UL: UL508C								
Structure (IP Rating)		Natural cooling, open (IP20)		Force cooling, open (IP20)		Force cooling, open (IP20) (*5)				
Close Mounting		Not Possible								
Environment	Ambient Temperature	0°C to 55°C (non-freezing), storage: -20°C to 65°C (non-freezing)								
	Ambient Humidity	90% RH maximum (non-condensing), storage: 90% RH maximum (non-condensing)								
	Ambience	Indoors (no direct sunlight); no corrosive gas, inflammable gas, oil mist or dust								
	Altitude	1000 m or less above sea level								
	Vibration Resistance	5.9 m/s² at 10 Hz to 55 Hz (directions of X, Y and Z axes)								
Weight (kg)		1.7	1.7	2.1	3.6	4.3	6.5	13.4	13.4	18.2

Notes: For MR-J4 Amplifier notes, please go to page 23.

MR-J4-DU_A4/MR-J4-DU_A4-RJ (General-Purpose Interface) Specifications (400 V)

Model Number MR-J4-_(-RJ)		DU30KA4	DU37KA4	DU45KA4	DU55KA4
Stocked Item		-	-	-	-
Compatible Converter Unit Model		MR-CR55K4 (*29)			
Output	Rated Voltage	3-phase 323 VAC			
	Rated Current (A)	87	102	131	143
Main Circuit Power Supply Input		Main circuit power is supplied from the converter unit to the drive unit (*29)			
Control Circuit Power Supply Input	Voltage/Frequency	1-phase 380 VAC to 480 VAC, 50 Hz/60 Hz			
	Rated Current (A)	0.2			
	Permissible Voltage Fluctuation	1-phase 323 VAC to 528 VAC			
	Permissible Frequency Fluctuation	±5% maximum			
	Power Consumption (W)	45			
Interface Power Supply		24 VDC ± 10% (required current capacity: 0.5 A (including CN8 connector signals))			
Control Method		Sine-wave PWM control/current control method			
Dynamic Brake		External option (*13)			
Communication Function		USB: Connect a personal computer (MR Configurator2 compatible)			
Encoder Output Pulse		Compatible (A/B/Z-phase pulse)			
Analog Monitor		2 channels			
Position Control Mode	Maximum Input Pulse Frequency	4 Mpulses/s (when using differential receiver), 200 kpulses/s (when using open collector)			
	Positioning Feedback Pulse	Encoder resolution: 22 bits			
	Command Pulse Multiplying Factor	Electronic gear A/B multiple, A: 1 to 16777215, B: 1 to 16777215, 1/10 < A/B < 4000			
	Positioning Complete Width Setting	0 pulse to ±65535 pulses (command pulse unit)			
	Error Excessive	±3 rotations			
	Torque Limit	Set by parameters or external analog input (0 V DC to +10 V DC/maximum torque)			
Speed Control Mode	Speed Control Range	Analog speed command 1:2000, internal speed command 1:5000			
	Analog Speed Command Input	0 V DC to ±10 V DC/rated speed (Speed at 10 V is changeable with [Pr. PC12].)			
	Speed Fluctuation Rate	±0.01% maximum (load fluctuation 0% to 100%), 0% (power fluctuation: ±10%) ±0.2% maximum (ambient temperature: 25 °C ± 10 °C) only when using analog speed command			
	Torque Limit	Set by parameters or external analog input (0 VDC to +10 V DC/maximum torque)			
Torque Control Mode	Analog Torque Command Input	0 VDC to ±8 V DC/maximum torque (input impedance: 10 kΩ to 12 kΩ)			
	Speed Limit	Set by parameters or external analog input (0 V DC to ± 10 V DC/rated speed)			
Fully Closed Loop Control	MR-J4-DU_A4	Two-wire type communication method			
	MR-J4-DU_A4-RJ	Two-wire/four-wire type communication method			
Servo Function		Advanced vibration suppression control II, adaptive filter II, robust filter, auto tuning, one-touch tuning, tough drive function, drive recorder function, machine diagnosis function, power monitoring function, super trace control, lost motion compensation			
Load-Side Encoder Interface	MR-J4-DU_A4	Mitsubishi Electric high-speed serial communication			
	MR-J4-DU_A4-RJ	Mitsubishi Electric high-speed serial communication, A/B/Z-phase differential input signal			
Protective Functions		Overcurrent shut-off, overload shut-off (electronic thermal), Servo Motor overheat protection, encoder error protection, undervoltage protection, instantaneous power failure protection, overspeed protection, error excessive protection			
Functional Safety		STO (IEC/EN 61800-5-2)			
Safety	Standards Certified by CB	EN ISO 13849-1 Category 3 PL d, IEC 61508 SIL 2, EN 62061 SIL CL 2, EN 61800-5-2 SIL 2			
	Response Performance	8 ms or less (STO input OFF – energy shut-off)			
	Test Pulse Input (STO) (*7)	Test pulse interval: 1 Hz to 25 Hz, test pulse off time: 1 ms maximum			
	Mean Time to Dangerous Failure (MTTFd)	100 years or longer			
	Diagnostic Coverage (DC)	Medium (90% to 99%)			
	Probability of Dangerous Failure Per Hour (PFH)	1.68×10^{-10} [1/h]			
Compliance To Standards		Refer to "Conformity with Global Standards and Regulations" in the User's Manual			
Structure (IP Rating)		Force cooling, open (IP20) (*5)			
Close Mounting		Not possible			
Environment	Ambient Temperature	Operation: 0°C to 55°C (non-freezing), storage: -20°C to 65°C (non-freezing)			
	Ambient Humidity	Operation/storage: 90%RH maximum (non-condensing)			
	Ambience	Indoors (no direct sunlight); no corrosive gas, inflammable gas, oil mist or dust			
	Altitude	1000 m or less above sea level			
	Vibration Resistance	5.9 m/s² at 10 Hz to 55 Hz (directions of X, Y and Z axes)			
Weight (kg)		16		19	

Notes: For MR-J4 Amplifier notes, please go to page 23.

MR-J4-03A6-RJ (General-Purpose Interface) Specifications

Servo Amplifier Model		MR-J4-03A6-RJ
Stocked Item		S
Output	Rated Voltage	3-phase 13 VAC
	Rated Current (Each Axis) (A)	2.4
Main Circuit Power Supply Input	Voltage (*1)	48 VDC/24 VDC (*39)
	Rated Current (A)	For 48 VDC: 1.2 A; For 24 VDC: 2.4 A
	Permissible Voltage Fluctuation	For 48 VDC: 40.8 VDC to 55.2 VDC; For 24 VDC: 21.6 VDC to 26.4 VDC
Control Circuit Power Supply Input	Voltage	24 VDC
	Rated Current (A)	0.2
	Permissible Voltage Fluctuation	21.6 VDC to 26.4 VDC
	Power Consumption (W)	5.0
Interface Power Supply		24 VDC ± 10% (required current capacity: 0.3 A)
Control Method		Sine-wave PWM control/current control method
Permissible Regenerative Power of the Built-in Regenerative Resistor (W)		0.7
Dynamic Brake		Built-in (*4, *40)
Communication Function		USB: Connect a personal computer (MR Configurator2 compatible); RS-422: 1 : n communication (up to 32 axes)
Encoder Output Pulse		Compatible (A/B/Z-phase pulse)
Analog Monitor		2 channels
Position Control Mode	Maximum Input Pulse Frequency	4 Mpulses/s (when using differential receiver), 200 kpulses/s (when using open collector)
	Positioning Feedback Pulse	Encoder resolution: 18 bits
	Command Pulse Multiplying Factor	Electronic gear A/B multiple, A: 1 to 16777215, B: 1 to 16777215, 1/10 < A/B < 4000
	Positioning Complete Width Setting	0 pulse to ±65535 pulses (command pulse unit)
	Error Excessive	±3 rotations
	Torque Limit	Set by parameters or external analog input (0 VDC to +10 VDC / maximum torque)
Speed Control Mode	Speed Control Range	Analog speed command 1:2000, internal speed command 1:5000
	Analog Speed Command Input	0 VDC to ±10 VDC / rated speed (Speed at 10 V is changeable with [Pr. PC12])
	Speed Fluctuation Rate	±0.01% maximum (load fluctuation: 0% to 100%), 0% (power fluctuation: ±10%) ±0.2% maximum (ambient temperature: 25°C ± 10°C) only when using analog speed command
	Torque Limit	Set by parameters or external analog input (0 VDC to +10 VDC / maximum torque)
Torque Control Mode	Analog Torque Command Input	0 VDC to ±8 VDC / maximum torque (input impedance: 10 kΩ to 12 kΩ)
	Speed Limit	Set by parameters or external analog input (0 VDC to ± 10 VDC / rated speed)
Positioning Mode		Point table method, program method, indexer (turret) method
Fully Closed Loop Control		Not compatible
Protective Functions		Overcurrent shut-off, regenerative overvoltage shut-off, overload shut-off (electronic thermal), servo motor overheat protection, encoder error protection, regenerative error protection, undervoltage protection, instantaneous power failure protection, overspeed protection, error excessive protection
Servo Function		Advanced vibration suppression control II, adaptive filter II, robust filter, auto tuning, one-touch tuning, vibration tough drive function, drive recorder function, machine diagnosis function, power monitoring function
Compliance to Standards		Refer to "Conformity with Global Standards and Regulations" in the Instruction Manual
Structure (IP Rating)		Natural cooling, open (IP20)
Close Mounting		Possible (*6)
DIN Rail Mounting (35 mm Wide)		Possible
Environment	Ambient Temperature	Operation: 0°C to 55°C (non-freezing), storage: -20°C to 65°C (non-freezing)
	Ambient Humidity	Operation/storage: 90% RH maximum (non-condensing)
	Ambience	Indoors (no direct sunlight); no corrosive gas, inflammable gas, oil mist or dust
	Altitude	1000 m or less above sea level
	Vibration Resistance	5.9 m/s² at 10 Hz to 55 Hz (directions of X, Y and Z axes)
Weight (kg)		0.2

Notes: For MR-J4 Amplifier notes, please go to page 23.

Amplifier Notes:

1. Rated output and speed of a rotary Servo Motor and a direct drive motor; and continuous thrust and maximum speed of a linear Servo Motor are applicable when the servo amplifier, combined with the Servo Motor, is operated within the specified power supply voltage and frequency.
2. Select the most suitable regenerative option for your system with our capacity selection software.
3. Refer to "Regenerative Option" in this guide for the tolerable regenerative power [W] when regenerative option is used.
4. When using the built-in dynamic brake, refer to "MR-J4-_B_(-RJ) Servo Amplifier Instruction Manual", MR-J4-_GF_(RJ) Servo Amplifier Instruction Manual (Motion Mode) or MR-J4W2-_B MR-J4W3-_B MR-J4W2-0303B6 Servo Amplifier Instruction Manual for the permissible load to motor inertia ratio and the permissible load to mass ratio and details.
5. Terminal blocks are excluded.
6. When the servo amplifiers are closely mounted, keep the ambient temperature within 0 °C to 45 °C, or use them with 75% or less of the effective load ratio.
7. The test pulse is a signal for the external circuit to perform self-diagnosis by turning off the signals to the servo amplifier instantaneously at regular intervals.
8. The rated current is 2.9 A when the servo amplifier is used with UL or CSA compliant servo motor.
9. Fully closed loop control is compatible with the servo amplifiers with software version A3 or later.
10. The command communication cycle depends on the controller specifications and the number of axes connected.
11. The value in brackets is applicable when cooling fans (2 units of 92 mm x 92 mm, minimum air flow: 1.0 m^3/min) are installed, and then [Pr. PA02] is changed.
12. Servo amplifiers without an enclosed regenerative resistor are also available. Refer to "1-Axis Servo Amplifier Model Designation" in this catalog for details.
13. Use an optional external dynamic brake with the servo amplifier. Without the external dynamic brake, a Servo Motor does not stop immediately at emergency stop and falls in free-run status, causing an accident such as machine collision, etc. Take measures to ensure safety on the entire system when not using the dynamic brake.
14. This function is available with the servo amplifiers with software version A8 or later.
15. This value is applicable for 750 W or smaller servo amplifiers in 200 V class when a 3-phase power supply is used.
16. This function is available with the servo amplifiers with software version B4 or later.
17. One unit of converter.
18. The servo amplifier built-in regenerative resistor is compatible with the maximum torque deceleration when the Servo Motor is used within the rated speed and the recommended load to motor inertia ratio. Contact your local sales office if the operating motor speed or the load to motor inertia ratio exceed the rated speed or the recommended ratio.
19. Reusable regenerative energy is equivalent to the energy generated under the following conditions. For rotary Servo Motor: the energy that is generated when the machine, whose moment of inertia is equivalent to the permissible charging amount, decelerates from the rated speed to a stop. For linear Servo Motor: the energy that is generated when the machine, whose mass is equivalent to the permissible charging amount, decelerates from the maximum speed to a stop. For direct drive motor: the energy that is generated when the machine, whose moment of inertia is equivalent to the permissible charging amount, decelerates from the rated speed to a stop.
20. This value is the moment of inertia when the rotary Servo Motor decelerates from the rated speed to a stop. When two axes are simultaneously decelerated, the permissible charging amount is equivalent to the total moments of inertia of the two axes. Otherwise, the permissible charging amount is equivalent to the moment of inertia of each axis. The value also applies to the direct drive motor.
21. This value is the mass when the linear Servo Motor decelerates from maximum speed to a stop. Mass of primary side (coil) is included. When two axes are simultaneously decelerated, the permissible charging amount is equivalent to the total masses of the two axes. Otherwise, the permissible charging amount is equivalent to the mass of each axis.
22. Not compatible with pulse train interface (A/B/Z-phase differential output type).
23. STO is common for all axes.
24. The load-side encoder and the Servo Motor encoder are compatible only with two-wire type communication method.
25. This value is applicable when a 3-phase power supply is used.
26. Servo amplifier with software version A3 or later is compatible with the command communication cycle of 0.222 ms. However, note that the following functions are not available when 0.222 ms is used: auto tuning (real time, one-touch, and vibration suppression control), adaptive filter II, vibration tough drive, and power monitoring.
27. The value is applicable for the MR-J4-_B-RJ010 servo amplifier only.
28. RS-422 communication is compatible with the servo amplifiers with software version A3 or later.
29. One unit of converter unit is required for each drive unit. Refer to the Users's Manual for the specifications of the converter unit.
30. 0.3 A is the value applicable when all I/O signals are used. The current capacity can be decreased by reducing the number of I/O points.
31. When using 1-phase 200 V AC to 240 V AC power supply, operate the servo amplifier at 75% or smaller effective load ratio.
32. For the connection example of the power circuit when a DC input is used, refer to the User's Manual.
33. Follow the restrictions in the User's Manual when using the servo amplifiers at altitude exceeding 1000 m and up to 2000 m over sea level.
34. The safety level depends on the setting value of [Pr. PF18 STO diagnosis error detection time] and whether STO input diagnosis by TOFB output is performed or not. For details, refer to the Function column of [Pr. PF18] in the User's Manual.
35. The external dynamic brake cannot be used for compliance with SEMI-F47 standard. Do not assign DB (Dynamic brake interlock) in [Pr. PD07] to [Pr. PD09]. Failure to do so will cause the servo amplifier to become servo-off when an instantaneous power failure occurs.
36. Use the servo amplifier with 75% or less of the effective load ratio when a 1-phase 200 VAC to 240 VAC power supply is used.
37. Refer to relevant Servo Amplifier Instruction Manual for the restrictions when using the servo amplifiers at altitude exceeding 1000 m and up to 2000 m above sea level.
38. MR-J4-_GF-RJ servo amplifiers are available for DC power input. For a connection example of power circuit with DC input, refer to relevant Servo Amplifier Instruction Manual.
39. Initial value is 48 VDC. For 24 VDC, set [Pr. PC05] to "_ 1 _ _." Servo motor characteristics vary depending whether the voltage is 48 VDC or 24 VDC. Refer to "HG-AK Series (Ultra-compact Size, Ultra-small Capacity) Specifications" and "HG-AK Series Torque Characteristics" in the User's Manual.
40. The dynamic brake is electronic. The electronic dynamic brake does not operate when the control circuit power is off. It may not operate depending on alarms and warnings. Refer to "MR-J4W2-_B MR-J4W3-_B MR-J4W2-0303B6 Servo Amplifier Instruction Manual" for details.